PART V

DRAWINGS

DRAWING NO. TX-EN-0650

Plum Creek Watershed

Floodwater Retarding Structure Site 6 Rehabilitation

Hays County, Texas

INDEX: See drawings cover sheet and Sheet G-1.

Floodwater Retarding Structure (FRS) No. 6 Rehabilitation, Drawing No. TX-EN-0650, Sheets G-1 through S-33 plus Cover Sheet (does not include referenced TxDOT Standard Details). TxDOT reference drawings can be found at the following website:

http://www.txdot.gov/inside-txdot/division/design/cad.html.

United States Department of Agriculture
Natural Resources Conservation Service

PLUM CREEK WATERSHED

FLOODWATER RETARDING STRUCTURE NO. 6 REHABILITATION
PLUM CREEK WATERSHED, TEXAS

DRAINAGE AREA	5,204 ACRES
TOTAL STORAGE	3,279 AC. FT.
EFFECTIVE HEIGHT OF DAM	34 FEET

SPONSORED BY

CALDWELL - TRAVIS SOIL AND WATER CONSERVATION DISTRICT
HAYS COUNTY SOIL AND WATER CONSERVATION DISTRICT
PLUM CREEK CONSERVATION DISTRICT

COOPERATING WITH

NATURAL RESOURCES CONSERVATION SERVICE
OF THE
U.S. DEPARTMENT OF AGRICULTURE

2015

INDEX OF DRAWINGS

SHEET No.	TITLE
G-1 - G-3	GENERAL SHEETS
C-1 - C-52	CIVIL SHEETS
S-1 - S-33	STRUCTURAL SHEETS
-	TXDOT STANDARD DETAILS (BY REFERENCE)

*NOTE: THE FULL INDEX OF DRAWINGS CAN BE FOUND ON SHEET G-1

CONSTRUCTION DRAWINGS APPROVED
ENGINEERING JOB CLASS VII

John W. Mueller
STATE CONSERVATION ENGINEER, N.R.C.S.
TEMPLE, TEXAS

4/24/15
DATE

FREESE AND NICHOLS
10431 Morado Circle, Suite 300
Austin, Texas 78759
Phone - (512) 617-3100
Fax - (512) 617-3101

STATE OF TEXAS
DUSTIN G. MORTENSEN
100000
LICENSED
PROFESSIONAL ENGINEER

Dustin Mortensen 4-23-2015

Freese and Nichols, Inc.
Texas Registered Engineering Firm F-2144

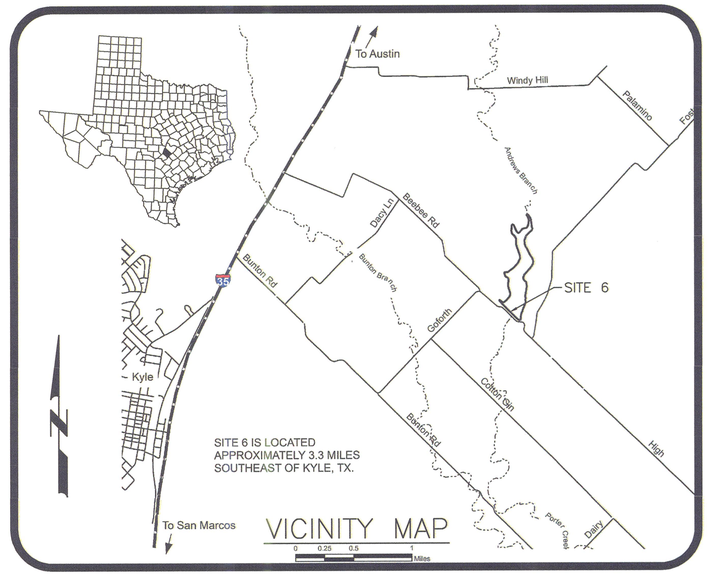

VICINITY MAP

DRAWING NO. FN: TX-NRC-COVER.dwg
TX-EN-0650

ACAD Rel: 19.1s (LMS Tech)
Filename: N:\STANDARD\2012\TX-NRC-COVER.dwg
Last Saved: 4/22/2015 1:56 PM Saved By: 02389

Plot Date: 4/22/2015 2:24 PM Plot By: cjg Filename: N:\STANDARD\2012\TX-NRC-COVER.dwg

SYMBOLS LEGEND

- EXISTING PROPERTY LINE / RIGHT OF WAY
- 358 — EXISTING CONTOUR
- CONSERVATION POOL
- —X— — EXISTING FENCE
- OE — EXISTING OVERHEAD ELECTRIC LINES
- W — EXISTING WATER LINES
- LOC — LIMITS OF CONSTRUCTION
- BW/C — BARB WIRE CONSTRUCT
- BW/R — BARB WIRE REMOVE
- BW/RC — BARB WIRE REMOVE/CONSTRUCT
- CL/C — CHAIN LINK CONSTRUCT
- CL/R — CHAIN LINK REMOVE
- CL/RC — CHAIN LINK REMOVE/CONSTRUCT
- SF SF SF — SILT FENCE
- AUXILIARY SPILLWAY POOL
- —X— — PROPOSED FENCE
- B-X — EXISTING BOREHOLES
- P.R.M. — PERMANENT REFERENCE MARKER
- EXISTING POWER POLE
- ΔBMX — EXISTING BENCHMARK
- DIRECTION OF STORMWATER RUNOFF
- WATER LEVELS
- CONCRETE
- STABILIZED CONSTRUCTION ENTRANCE
- CUT SLOPE
- FILL SLOPE
- LEFT RIGHT — ORIENTATION WHEN LOOKING DOWNSTREAM
- DIRECTION IN WHICH SECTION IS TAKEN; 1 —; SECTION NUMBER; SHEET ON WHICH SECTION IS SHOWN
- 1 —; DETAIL NUMBER; SHEET ON WHICH DETAIL IS TAKEN

ABBREVIATIONS

', FT	FEET
ADD'L	ADDITIONAL
APPROX.	APPROXIMATELY
℄, BL	BASELINE
BMP	BEST MANAGEMENT PRACTICE
BM	BENCH MARK
C/C	CENTER TO CENTER
CFS	CUBIC FEET PER SECOND
℄	CENTERLINE
CLR	CLEAR
CJ	CONSTRUCTION JOINT
CT. J.	CONTRACTION JOINT
DEG.	DEGREES
ø	DIAMETER
DWLS	DOWELS
DS	DOWNSTREAM
EA	EACH
EF	EACH FACE
EW	EACH WAY
E	EAST, EASTING
ELEV., EL	ELEVATION
EQ	EQUAL
EQ SPA	EQUALLY SPACED
EXIST.	EXISTING
EXP JT	EXPANSION JOINT
℄	FLOW LINE
I.D.	INSIDE DIAMETER
IF	INSIDE FACE
",IN.	INCHES
LOC	LIMITS OF CONSTRUCTION
MAX.	MAXIMUM
MIN.	MINIMUM
MSL	MEAN SEA LEVEL
NOI	NOTICE OF INTENT
N	NORTH, NORTHING
N.T.S.	NOT TO SCALE
O.C.	ON CENTER
OF	OUTSIDE FACE
PSI	POUNDS PER SQUARE INCH
R	RADIUS
REINF.	REINFORCED, REINFORCING
RQMT.	REQUIREMENT
SCH.	SCHEDULE
SHT.	SHEET
SF	SILT FENCE
SPA	SPACING
STA.	STATION
STD	STANDARD
S.S.	STAINLESS STEEL
SWPPP	STORM WATER POLLUTION PREVENTION PLAN
S.D.	STUB DIVERSION
T & B	TOP AND BOTTOM
TYP	TYPICAL
U.N.O	UNLESS NOTED OTHERWISE
US	UPSTREAM
WPAP	WATER POLLUTION ABATEMENT PLAN
YR	YEAR

INDEX OF DRAWINGS

SHEET NO.	TITLE
GENERAL	
	COVER
G-1	SHEET INDEX, LEGEND, AND ABBREVIATIONS
G-2	GENERAL NOTES
G-3	HYDROLOGIC AND HYDRAULIC DATA
CIVIL	
C-1	EXISTING SITE PLAN
C-2	PROPOSED SITE PLAN
C-3	DAM PLAN AND PROFILE STA. 5+50 TO 22+50
C-4	DAM PLAN AND PROFILE STA. 22+50 TO 40+00
C-5	TYPICAL EMBANKMENT CROSS-SECTIONS
C-6	EMBANKMENT CROSS-SECTIONS STA. 6+00 TO 13+00
C-7	EMBANKMENT CROSS-SECTIONS STA. 14+00 TO 21+00
C-8	EMBANKMENT CROSS-SECTIONS STA. 22+00 TO 29+00
C-9	EMBANKMENT CROSS-SECTIONS STA. 30+00 TO 37+00
C-10	EMBANKMENT CROSS-SECTIONS STA. 38+00 TO 39+00
C-11	FOUNDATION DRAIN - PLAN AND PROFILE
C-12	LABYRINTH WEIR EXCAVATION - PLAN VIEW
C-13	LABYRINTH WEIR EXCAVATION - SECTIONS
C-14	LABYRINTH WEIR EXCAVATION - SECTIONS
C-15	EXISTING PRINCIPAL SPILLWAY MODIFICATIONS
C-16	LABYRINTH WEIR - PLAN VIEW
C-17	LABYRINTH WEIR - SECTIONS
C-18	LABYRINTH WEIR - SECTIONS
C-19	LABYRINTH WEIR - SECTIONS STA. 2+00 TO 2+50
C-20	LABYRINTH WEIR - SECTIONS STA. 3+25 TO 3+50
C-21	NEW PRINCIPAL SPILLWAY - PLAN AND PROFILE
C-22	NEW PRINCIPAL SPILLWAY - PLAN AND PROFILE
C-23	LABYRINTH WEIR UNDERDRAIN - PLAN AND SECTION
C-24	LABYRINTH WEIR - UNDERDRAIN DETAILS
C-25	DRAIN PIPE DETAILS
C-26	CHAIN LINK FENCE DETAILS
C-27	RISER - STEEL SCHEDULE PLAN, ELEVATION, AND SECTIONS
C-28	RISER - STEEL PLACEMENT 1
C-29	RISER - STEEL PLACEMENT 2
C-30	RISER - STEEL PLACEMENT 3
C-31	TRASHRACK AND MANHOLE COVER - DETAILS
C-32	SCOUR APRON AND SLUICE GATE DETAILS
C-33	PRINCIPAL SPILLWAY - PIPE DETAILS
C-34	SLOPE PAVING DETAILS
C-35	PRINCIPAL SPILLWAY CULVERT
C-36	LABYRINTH WEIR - DETAILS
C-37	CULVERT DETAILS
C-38	GOFORTH RD. - TYPICAL ROADWAY SECTIONS
C-39	GOFORTH RD. - PLAN AND PROFILE STA. 8+50 TO 14+00
C-40	GOFORTH RD. - PLAN AND PROFILE STA. 14+00 TO 19+25
C-41	GOFORTH RD. - PLAN AND PROFILE STA. 19+25 TO END
C-42	GOFORTH RD. - SIGNING AND STRIPING
C-43	GOFORTH RD. - TRAFFIC CONTROL ADVANCED WARNING SIGNS
C-44	GOFORTH RD. - TRAFFIC CONTROL PLAN - PHASE 1
C-45	GOFORTH RD. - TRAFFIC CONTROL PLAN - PHASE 1
C-46	GOFORTH RD. - TRAFFIC CONTROL PLAN AND DETOUR ROUTING PHASE 2
C-47	MISCELLANEOUS FENCE DETAILS
C-48	BAR GATE DETAILS
C-49	GEOLOGICAL BOREHOLE LOCATIONS - PLAN VIEW
C-50	GEOLOGICAL BOREHOLE- PROFILES
C-51	GEOLOGICAL BOREHOLE- PROFILES
C-52	STORMWATER POLLUTION PREVENTION PLAN

SHEET NO.	DESCRIPTION
STRUCTURAL	
S-1	GENERAL NOTES
S-2	LABYRINTH WEIR GENERAL PLAN
S-3	LABYRINTH WEIR PARTIAL PLAN AND SECTIONS
S-4	LABYRINTH WEIR PARTIAL REINFORCEMENT PLAN
S-5	LABYRINTH WEIR ELEVATIONS
S-6	LABYRINTH WEIR ELEVATIONS
S-7	LABYRINTH WEIR SECTIONS
S-8	LABYRINTH TRAINING WALL REINFORCEMENT TABLE
S-9	LABYRINTH WEIR PARTIAL PLAN AND SECTIONS
S-10	LABYRINTH WEIR PARTIAL REINFORCEMENT PLAN
S-11	LABYRINTH WEIR PARTIAL PLAN AND SECTIONS
S-12	LABYRINTH WEIR PARTIAL REINFORCEMENT PLAN
S-13	LABYRINTH WEIR SLAB REINFORCEMENT TABLE
S-14	LABYRINTH WEIR ELEVATIONS
S-15	LABYRINTH WEIR SECTIONS
S-16	LABYRINTH WEIR SECTIONS
S-17	LABYRINTH WEIR PARTIAL PLAN AND SECTIONS
S-18	LABYRINTH WEIR SECTIONS
S-19	LABYRINTH WEIR ELEVATIONS
S-20	LABYRINTH WEIR ELEVATIONS
S-21	LABYRINTH WEIR SECTIONS
S-22	LABYRINTH WEIR PARTIAL PLAN AND SECTIONS
S-23	LABYRINTH WEIR ELEVATIONS
S-24	CHUTE SLAB REINFORCEMENT TABLE
S-25	WINGWALL PLAN AND SECTION
S-26	WINGWALL ELEVATION
S-27	WINGWALL SECTIONS
S-28	SECTIONS AND DETAILS
S-29	PIPE PENETRATION REINFORCEMENT
S-30	PRINCIPAL SPILLWAY CULVERT OUTLET
S-31	DOWNSTREAM BLOCK SECTIONS AND DETAILS
S-32	MISC REINFORCEMENT TABLE & BAR TYPES
S-33	STANDARD DETAILS
TXDOT STANDARD DETAILS	
BC(1)-14	BARRICADE AND CONSTRUCTION - GENERAL NOTES AND REQUIREMENTS
BC(2)-14	BARRICADE AND CONSTRUCTION - PROJECT LIMIT
BC(3)-14	BARRICADE AND CONSTRUCTION - WORK ZONE SPEED LIMIT
BC(4)-14	BARRICADE AND CONSTRUCTION - TEMPORARY SIGN NOTES
BC(5)-14	BARRICADE AND CONSTRUCTION - TYPICAL SIGN SUPPORT
BC(6)-14	BARRICADE AND CONSTRUCTION - PORTABLE CHANGEABLE MESSAGE SIGN (PCMS)
BC(7)-14	BARRICADE AND CONSTRUCTION - ARROW PANEL, REFLECTORS, LIGHTS & ATTENUATOR
BC(8)-14	BARRICADE AND CONSTRUCTION - CHANNELIZING DEVICES
BC(9)-14	BARRICADE AND CONSTRUCTION - CHANNELIZING DEVICES
BC(10)-14	BARRICADE AND CONSTRUCTION - CHANNELIZING DEVICES
BC(11)-14	BARRICADE AND CONSTRUCTION - PAVEMENT MARKINGS
BC(12)-14	BARRICADE AND CONSTRUCTION - PAVEMENT MARKING PATTERNS
WZ(TD)-13	TRAFFIC CONTROL PLAN - TYPICAL DETAILS
WZ(RCD)-13	WORK ZONE ROAD CLOSURE DETAILS
TCP(2-1)-12	TCP - CONVENTIONAL ROAD SHOULDER WORK
PM(1)-12	TYPICAL STANDARD PAVEMENT MARKINGS
PM(2)-12	RAISED, REFLECTORIZED PROFILE MARKINGS
D&OM(1)-15	DELINEATORS & OBJECT MARKER - INSTALLATION AND MATERIAL DESCRIPTION
D&OM(3)-15A	DELINEATORS & OBJECT MARKER - INSTALLATION WITH MATERIAL DESCRIPTION
SMD(GEN)-08	SIGN MOUNTING DETAILS - GENERAL NOTES DETAILS
SMD(SLIP-1)-08	SIGN MOUNTING DETAILS - TRIANGULAR SLIPBASE SYSTEM
SMD(SLIP-2)-08	SIGN MOUNTING DETAILS - TRIANGULAR SLIPBASE SYSTEM
SMD(SLIP-3)-08	SIGN MOUNTING DETAILS - TRIANGULAR SLIPBASE SYSTEM
TSR(4)-13	TYPICAL SIGN REQUIREMENTS
GF(31)-14	METAL BEAM GUARD FENCE
SGT(8)31-14	SINGLE GUARDRAIL TERMINAL (SKT 31) (WOOD POST)
SCP - 5	SINGLE BOX CULVERTS PRECAST
SCP - MD	BOX CULVERTS PRECAST MISC. DETAILS
PSET-RR	SAFETY END TREATMENT FOR 0° SKEW BOX CULVERTS - TYPE I CROSS DRAINAGE
SETB-CD (2 SHEETS)	SAFETY END TREATMENT WITH FLARED WING WALLS FOR 15° & 30° SKEW BOX CULVERTS - TYPE I CROSS DRAINAGE
SETB-FW-S (2 SHEETS)	SAFETY END TREATMENT WITH FLARED WING WALLS FOR 15° & 30° SKEW

NOTE:

TXDOT STANDARDS DETAIL AVAILABLE AT THE FOLLOWING WEBSITES:

HTTPS://WWW.DOT.STATE.TX.US/INSDTDOT/ORGCHART/CMD/CSERVE/STANDARD/BRIDGE-E.HTM
HTTPS://WWW.DOT.STATE.TX.US/INSDTDOT/ORGCHART/CMD/CSERVE/STANDARD/TOC.HTM
HTTPS://WWW.DOT.STATE.TX.US/INSDTDOT/ORGCHART/CMD/CSERVE/STANDARD/RDWYLSE.HTM

Freese and Nichols, Inc.
Texas Registered Engineering Firm F-2144
STATE OF TEXAS
DUSTIN G. MORTENSEN
100000
LICENSED
PROFESSIONAL ENGINEER
4-23-2015

DESIGNED BY: JWE
DRAWN BY: CJG
CHECKED BY: DGM
FILE NAME: TX-NRC-GN01.dwg
DATE CHECKED: 4/22/2015

SHEET INDEX, LEGEND, AND ABBREVIATIONS

FLOODWATER RETARDING STRUCTURE NO. 6 REHABILITATION
PLUM CREEK WATERSHED
OF THE
PLUM CREEK WATER, TEXAS

United States Department of Agriculture
Natural Resources Conservation Service

REVISIONS	DATE

DRAWING NO.
TX-EN-0650

SHEET
G-1

ACAD Rel: 19.1s (LMS Tech)
Filename: N:\STANDARD\2012\TX-NRC-GN01.dwg
Last Saved: 4/21/2015 1:13 PM Saved By: cjg

Plot Date: 4/22/2015 1:38 PM Plot By: 02389 Filename: N:\STANDARD\2012\TX-NRC-GN01.dwg

GENERAL NOTES

1. THE GENERAL NOTES AND TYPICAL DETAILS ARE GENERAL AND APPLY TO THE ENTIRE PROJECT EXCEPT WHERE THERE ARE SPECIFIC INDICATIONS TO THE CONTRARY.
2. CONTRACTOR SHALL BE RESPONSIBLE FOR FIELD VERIFYING ALL EXISTING CONDITIONS, INCLUDING LOCATION AND DIMENSIONS OF ALL EXISTING UTILITIES. CONTRACTOR SHALL NOTIFY OWNER'S RESIDENT REPRESENTATIVE IF THERE IS A CONFLICT BETWEEN THE CONTRACT DOCUMENTS AND EXISTING CONDITIONS BEFORE PROCEEDING WITH WORK.
3. CONTOURS WERE OBTAINED FROM SURVEYS PERFORMED IN 2010 AND 2014. CONTRACTOR SHALL MAKE SITE SURVEYS AS NECESSARY FOR CONSTRUCTION AND IN ACCORDANCE WITH CONSTRUCTION SPECIFICATION 7, CONSTRUCTION SURVEYS. HORIZONTAL DATUM IS TEXAS STATE PLANE, NAD83, SOUTH CENTRAL ZONE, 4204, US SURVEY FEET. VERTICAL DATUM IS NAVD 88. ALL ELEVATIONS ARE IN FEET ABOVE MEAN SEA LEVEL (MSL).
4. CONTRACTOR SHALL STAY WITHIN THE LIMITS OF CONSTRUCTION AND NOT VENTURE OFF THE ACCESS ROADS EXCEPT FOR DIRECT ACCESS TO THE WORK AREAS. CONTRACTOR SHALL CLEARLY MARK THE LIMITS OF CONSTRUCTION.
5. COMPLY AND CONDUCT WORK IN ACCORDANCE WITH OWNER'S SECURITY REGULATIONS AND REQUIREMENTS. PROVIDE SITE SECURITY AS NECESSARY TO PROTECT AGAINST VANDALISM AND LOSS BY THEFT.
6. CONTRACTOR SHALL MANAGE AND PROTECT THE WORK FROM FLOOD FLOWS, STREAM FLOWS, SURFACE WATER RUNOFF, GROUNDWATER OR ANY OTHER WATER ENCOUNTERED DURING THE PROGRESS OF THE WORK IN ACCORDANCE WITH CONSTRUCTION SPECIFICATION II, REMOVAL OF WATER.
7. NOTIFY OWNER OF ANY SIGNS TO BE TEMPORARILY REMOVED. ALL EXISTING SIGNS TEMPORARILY REMOVED, IF ANY, SHALL BE STORED ON SITE BY THE CONTRACTOR AND SHALL BE REINSTALLED BY THE CONTRACTOR AT THE END OF CONSTRUCTION IN THEIR ORIGINAL CONDITION.
8. THE AREA AROUND OVERHEAD ELECTRICAL TOWERS SHALL BE PROTECTED. PROTECTION SHALL BE PROVIDED TO ANY TOWER, POLE OR GUY STRUCTURE WHEN TRAFFIC OR CONSTRUCTION ACTIVITY IS WITHIN 50 FEET OF THE STRUCTURE.
9. WORK UNDER THIS CONTRACT IS AUTHORIZED UNDER THE TERMS AND CONDITIONS OF THE U.S. ARMY CORPS OF ENGINEERS NATIONWIDE PERMIT 3, MAINTENANCE. SEE THE SWPPP FOR DETAILS.
10. CONTRACTOR SHALL FOLLOW REQUIREMENTS OF SWPPP.
11. CONSTRUCT THE STAGING AREAS AND VEHICLE MAINTENANCE AREAS IN A MANNER TO MINIMIZE THE RUNOFF OF POLLUTANTS.
12. NO ON-SITE CONCRETE BATCH PLANT WILL BE PERMITTED.
13. NO CONSTRUCTION FILL OR MATERIALS SHALL BE PLACED OR STORED IN AREAS NOT SPECIFICALLY DESIGNATED FOR THAT PURPOSE.
14. PROVIDE PROTECTED STORAGE FOR PAINTS, CHEMICALS, SOLVENTS, AND OTHER POTENTIALLY HAZARDOUS MATERIALS.
15. HANDLING, STORAGE, AND DISPOSAL OF ALL WASTE MATERIAL SHALL CONFORM TO THE SWPPP.
16. PREVENT POLLUTION OF SURFACE WATER AND GROUNDWATER WITH PETROLEUM PRODUCTS OR OTHER HAZARDOUS OR REGULATED SUBSTANCES. TAKE SPECIAL MEASURES TO PREVENT CHEMICALS, FUELS, OILS, GREASES, HERBICIDES, AND INSECTICIDES FROM ENTERING DRAINAGE WAYS. DO NOT ALLOW WATER USED IN ON-SITE MATERIAL PROCESSING AND CLEANUP, AND OTHER WASTEWATERS TO ENTER A DRAINAGE WAY, STREAM, OR RIVER.
17. PROMPTLY REPAIR EQUIPMENT LEAKING OIL/HYDRAULIC FLUID/ETC. IMMEDIATELY REMOVE AND REPLACE, AS NECESSARY, ALL SOILS ON WHICH SUCH LEAKAGE OCCURRED. PREVENT THE SPREAD OF LEAKED FLUIDS OR FLUID CONTAMINATED MATERIALS FROM THE ORIGINAL LEAK AREA. BE RESPONSIBLE FOR THE PROPER HANDLING AND DISPOSAL OF ALL SUCH CONTAMINATED MATERIALS.
18. PROVIDE SECONDARY CONTAINMENT AROUND ANY FUEL AND CHEMICAL STORAGE AREAS TO ENSURE THAT SPILLS FROM ANY SUCH AREAS DO NOT DISCHARGE FROM THE SECONDARY CONTAINMENT AREA. THE SECONDARY CONTAINMENT CAPACITY SHALL BE ADEQUATE TO CONTAIN THE CAPACITY OF THE LARGEST TANK/CONTAINER PLUS SUFFICIENT FREEBOARD TO CONTAIN PRECIPITATION.
19. PRECAUTIONS SHALL BE TAKEN DURING EQUIPMENT FUELING AND CHEMICAL TRANSFER OPERATIONS IN ORDER TO PREVENT SPILLS FROM OCCURRING AND TO MINIMIZE THE IMPACT OF ANY SPILL THAT DOES OCCUR. ALL FUEL AND CHEMICAL TRANSFERS SHALL BE CONTINUOUSLY MONITORED. MAINTAIN APPROPRIATE EQUIPMENT ON-SITE FOR RESPONDING TO ANY OIL OR HAZARDOUS SUBSTANCE SPILL. ADDITIONALLY, THERE SHALL BE AN ON-SITE PROHIBITION AGAINST THE TOPPING OFF OF TANKS AND EQUIPMENT.
20. REMOVE ALL FORM WORK FOLLOWING CONSTRUCTION.
21. EXISTING ROADS, ACCESS DRIVES, UTILITIES AND PROPERTY WITHIN THE LIMITS OF CONSTRUCTION DAMAGED BY CONTRACTOR AND ALL DISTURBED AREAS SHALL BE REPAIRED BY CONTRACTOR TO SAME OR BETTER CONDITION PRIOR TO END OF CONSTRUCTION.

CALL BEFORE YOU DIG!
Texas 811 Know what's below. Call before you dig.
PARTICIPANTS REQUEST 48 HOURS NOTICE BEFORE YOU DIG, DRILL, OR BLAST – STOP AND CALL
811
THE LONE STAR NOTIFICATION COMPANY AT 1-800-669-8344

MATERIAL PLACEMENT DATA

Zone	Material Classification	Material Source	Placement Location	Liquid Limit	Plasticity Index	Percent Passing No. 200	Maximum Particle Size	Maximum Loose Lift Thickness	Moisture Density Test		Minimum Percent Compaction	Moisture Limits	
1	CH	Embankment Shell Excavation	Embankment	No Rqmt	No Rqmt	> 50	2"	8"	ASTM D698	A	95	-1	+3
2	CH	Embankment Core Excavation	Embankment	No Rqmt	No Rqmt	> 50	2"	8"	ASTM D698	A	95	-1	+3
3	CL	Imported Fill	Below Structures	< 25	4 - 15	50 to 70	2"	8"	ASTM D698	A	100	-2	+1
3[Note 4]	CL	Imported Fill	Adjacent to Structures	< 25	4 - 15	50 to 70	2"	8"	ASTM D698	A	95	-2	+1
4	Crushed Stone	Imported Fill	Below Structures	< 35	≤ 10	< 30	1-3/4"	12"	ASTM D1557	A	100	-3	OPT
4[Note 4]	Crushed Stone	Imported Fill	Adjacent to Structures	< 35	≤ 10	< 30	1-3/4"	12"	ASTM D698	A	95	-3	OPT

NOTES:

1. INCREASE COMPACTION EFFORTS FOR IMPORTED MATERIALS PLACED BELOW STRUCTURES TO MINIMIZE SETTLEMENTS.
2. ZONE 4 CRUSHED STONE SHALL COMPLY WITH TXDOT STD. SPEC. ITEM 247, GRADE 1, TYPE A.
3. TXDOT TEX-113E MAY BE USED AS AN ALTERNATIVE METHOD TO ASTM D1557 FOR DETERMINING THE MOISTURE DENSITY CHARACTERISTICS OF THE ZONE 4 MATERIAL.
4. COMPACTION REQUIREMENTS FOR ZONES 3 AND 4 VARY BASED ON PLACEMENT LOCATION.

FINE FILTER REQUIREMENTS

Sieve	Size (mm)	Min Passing	Max Passing
2.in.	50.8	100	
1.5 in.	38.1	99	
1 in.	25.4	96	
3/4 in.	19.1	94	
3/8 in.	9.53	88	
No. 4	4.76	82	100
No. 16	2.36	74	98
No. 18	1.180	66	89
No. 30	0.595	55	70
No. 50	0.297	34	48
No. 100	0.149	8	27
No. 200	0.074		3

COARSE FILTER REQUIREMENTS

Sieve	Size (mm)	Min Passing	Max Passing
2.in.	50.8	100	
1.5 in.	38.1	99	
1 in.	25.4	95	
3/4 in.	19.1	91	
3/8 in.	9.53	65	100
No. 4	4.76	39	85
No. 16	2.36	10	60
No. 18	1.180	0	30
No. 30	0.595		10
No. 50	0.297		5
No. 100	0.149		0

ZONE 4 CRUSHED STONE REQUIREMENTS

Sieve	Size (mm)	Min Passing	Max Passing
1-3/4 in.	44.5	100	
7/8 in.	22.6	65	90
3/8 in.	9.51	50	70
No. 4	4.76	35	55
No. 40	0.42	15	30

DRAIN FILTER NOTES:

1. INSTALLATION AND MATERIALS SHALL COMPLY WITH THE REQUIREMENTS OF CONSTRUCTION SPECIFICATION 24, AND MATERIALS SPECIFICATION 521.
2. CRUSHED STONE SHALL COMPLY WITH TXDOT STD. SPEC. ITEM 247, GRADE 1, TYPE A.

ROCK RIPRAP GRADATION TABLE

% PASSING	ROCK DIAMETER (IN.)		WEIGHT OF ROCK (LBS.)	
	MIN.	MAX.	MIN.	MAX.
100	18	24	375	888
85	16	22	263	684
50	12	17	111	316
10	1	6	0.1	14

NOTES:

1. ROCK RIPRAP SHALL MEET THE GRADATION REQUIREMENTS SHOWN IN THE GRADATION TABLE ON THIS SHEET. ALL ROCK RIPRAP SHALL COMPLY WITH CONSTRUCTION SPECIFICATION 61, AND MATERIAL SPECIFICATION 523.
2. NON-WOVEN GEOTEXTILE MATERIAL SHALL BE PLACED BETWEEN THE ROCK RIPRAP AND THE APPROVED SUBGRADE.
3. THE NON-WOVEN GEOTEXTILE MATERIAL SHALL COMPLY WITH CONSTRUCTION SPECIFICATION 95, AND MATERIAL SPECIFICATION 592.
4. ROCK PLACED AGAINST CONCRETE STRUCTURES SHALL BE PLACED CAREFULLY TO AVOID DAMAGE.

Freese and Nichols, Inc.
Texas Registered Engineering Firm F-2144
STATE OF TEXAS
DUSTIN G. MORTENSEN
100000
LICENSED
PROFESSIONAL
ENGINEER
4-23-2015

DESIGNED BY: JWE
DRAWN BY: CJG
CHECKED BY: DGM
FILE NAME: TX-NRC-GN02.dwg
DATE CHECKED: 4/22/2015

GENERAL NOTES

FLOODWATER RETARDING STRUCTURE NO. 6 REHABILITATION
PLUM CREEK WATERSHED
OF THE
PLUM CREEK WATER, TEXAS

United States Department of Agriculture
Natural Resources Conservation Service

REVISIONS DATE

DRAWING NO. TX-EN-0650

SHEET G-2

ACAD Rel: 19.1s (LMS Tech)
Filename: N:\STANDARD\2012\TX-NRC-GN02.dwg
Last Saved: 4/15/2015 4:33 PM Saved By: dgm
Plot Date: 4/22/2015 1:38 PM Plot By: 02389 Filename: N:\STANDARD\2012\TX-NRC-GN02.dwg

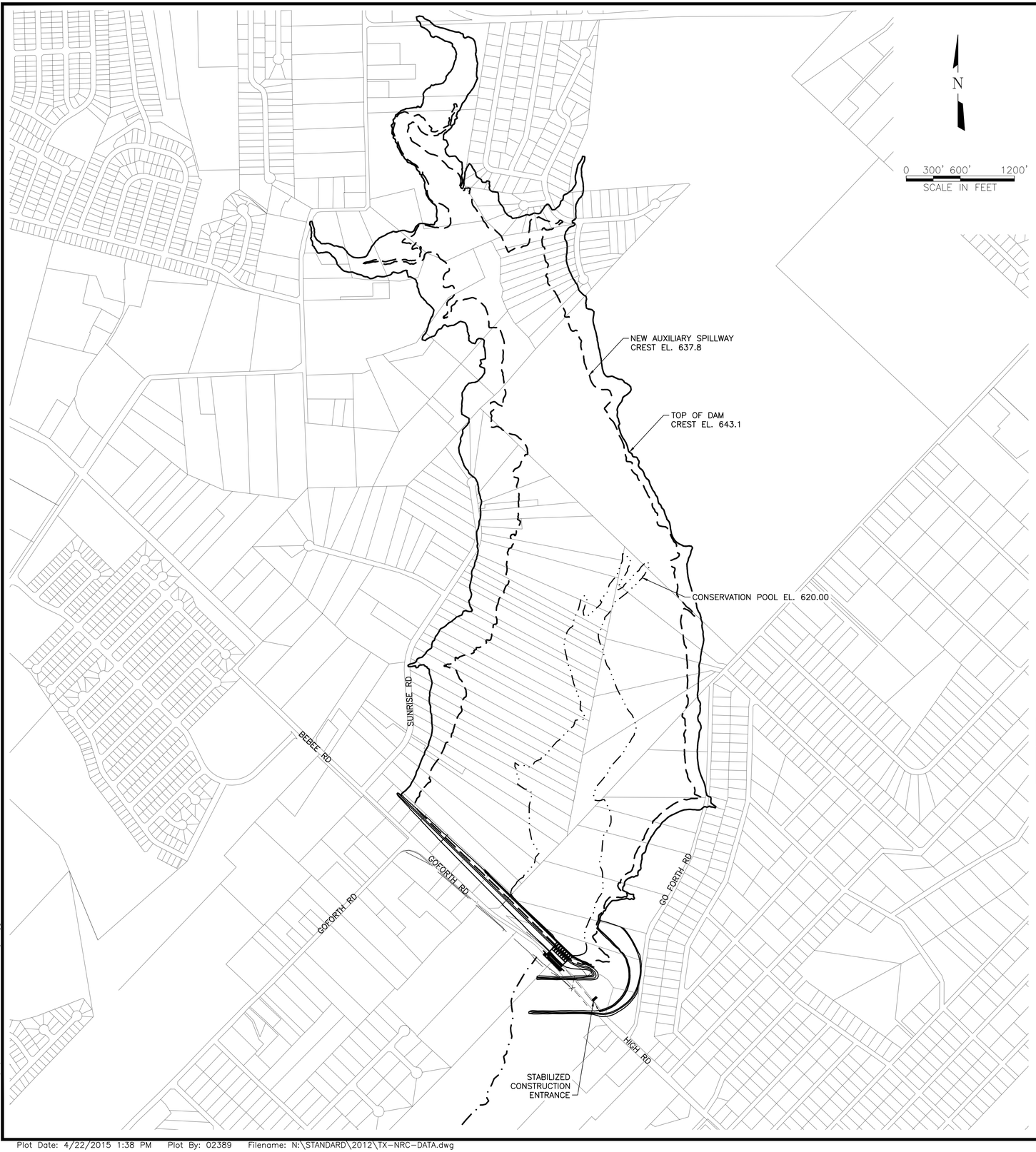

POST–CONSTRUCTION DAM INFORMATION

ELEVATION	SURACE AREA, ACRES	CAPACITY	
		ACRE-FEET	INCHES
620	60.7	156	0.36
622	81.75	298	0.69
624	102.8	483	1.11
626	123.9	709	1.63
628	158.4	992	2.29
630	185.7	1,336	3.08
632	215.8	1,737	4.01
634	248.9	2,202	5.08
636	284.7	2,735	6.31
637.8	319.2	3,279	7.56
640	365.1	4,031	9.30
642	411.8	4,808	11.09
643.1	438.5	5,288	12.19
DRAINAGE AREA (ACRES) UNCONTROLLED			5,203.8
TOP OF DAM (EFFECTIVE), EL.			643.1
42" PRINCIPAL SPILLWAY CREST, EL.			620.0
AUXILIARY SPILLWAY CREST, EL.			637.8
REQUIRED 50 YR. SEDIMENT CAPACITY, AC-FT			156
FLOODWATER STORAGE, AC-FT			3,123
MAX. AUXILIARY SPILLWAY CAPACITY @ EL. 643.1, CFS			31,414
PRINCIPAL SPILLWAY DISCHARGE @ EL. 637.8, CFS			246.7

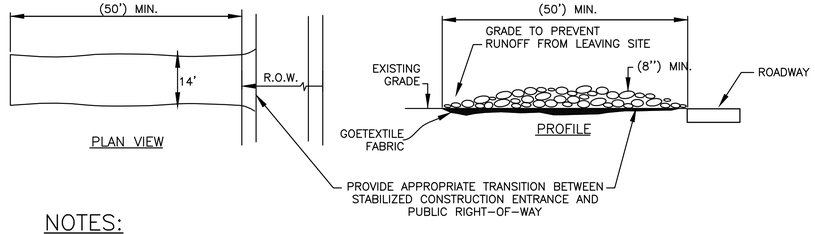

NOTES:

1. STONE SIZE: 3"–5" OPEN GRADED ROCK.
2. LENGTH: AS EFFECTIVE BUT NOT LESS THAN 50'.
3. THICKNESS: NOT LESS THAN 8".
4. WIDTH: NOT LESS THAN FULL WIDTH OF ALL POINTS OF INGRESS/EGRESS.
5. WASHING: WHEN NECESSARY, VEHICLE WHEELS SHALL BE CLEANED TO REMOVE SEDIMENT PRIOR TO ENTRANCE ONTO PUBLIC ROADWAY. WHEN WASHING IS REQUIRED, IT SHALL BE DONE ON AN AREA STABILIZED WITH CRUSHED STONE AND DRAINS INTO AN APPROVED TRAP OR SEDIMENT BASIN. ALL SEDIMENT SHALL BE PREVENTED FROM ENTERING ANY STORM DRAIN, DITCH OR WATERCOURSE USING APPROVED METHODS.
6. MAINTENANCE: THE ENTRANCE SHALL BE MAINTAINED IN A CONDITION THAT WILL PREVENT TRACKING OR FLOWING OF SEDIMENT ONTO PUBLIC ROADWAY. THIS MAY REQUIRE PERIODIC TOP DRESSING WITH ADDITIONAL STONE AS CONDITIONS DEMAND, AS WELL AS REPAIR AND CLEAN OUT OF ANY MEASURE DEVICES USED TO TRAP SEDIMENT. ALL SEDIMENT THAT IS SPILLED, DROPPED, WASHED OR TRACKED ONTO PUBLIC ROADWAY MUST BE REMOVED IMMEDIATELY.
7. DRAINAGE: ENTRANCE MUST BE PROPERLY GRADED OR INCORPORATE A DRAINAGE SWALE TO PREVENT RUNOFF FROM LEAVING THE CONSTRUCTION SITE.
8. PROVIDE GEOTEXTILE FABRIC BETWEEN NATURAL GRADE AND 3"–5" ROCK.

STABILIZED CONSTRUCTION ENTRANCE

NOT TO SCALE

Freese and Nichols, Inc.
Texas Registered Engineering Firm F-2144
STATE OF TEXAS
DUSTIN G. MORTENSEN
100000
LICENSED
PROFESSIONAL ENGINEER
4-23-2015

DESIGNED BY: JWE
DRAWN BY: CJG
CHECKED BY: DGM
FILE NAME: TX–NRC–DATA.dwg
DATE CHECKED: 4/22/2015

HYDROLOGIC AND HYDRAULIC DATA

FLOODWATER RETARDING STRUCTURE NO. 6 REHABILITATION
PLUM CREEK WATERSHED
OF THE
PLUM CREEK WATER, TEXAS

NRCS
United States Department of Agriculture
Natural Resources Conservation Service

REVISIONS DATE

DRAWING NO.
TX–EN–0650

SHEET
G–3

ACAD Rel: 19.1s (LMS Tech)
Filename: N:\STANDARD\2012\TX–NRC–DATA.dwg
Last Saved: 3/9/2015 3:21 PM Saved By: cjg

Plot Date: 4/22/2015 1:38 PM Plot By: 02389 Filename: N:\STANDARD\2012\TX–NRC–DATA.dwg

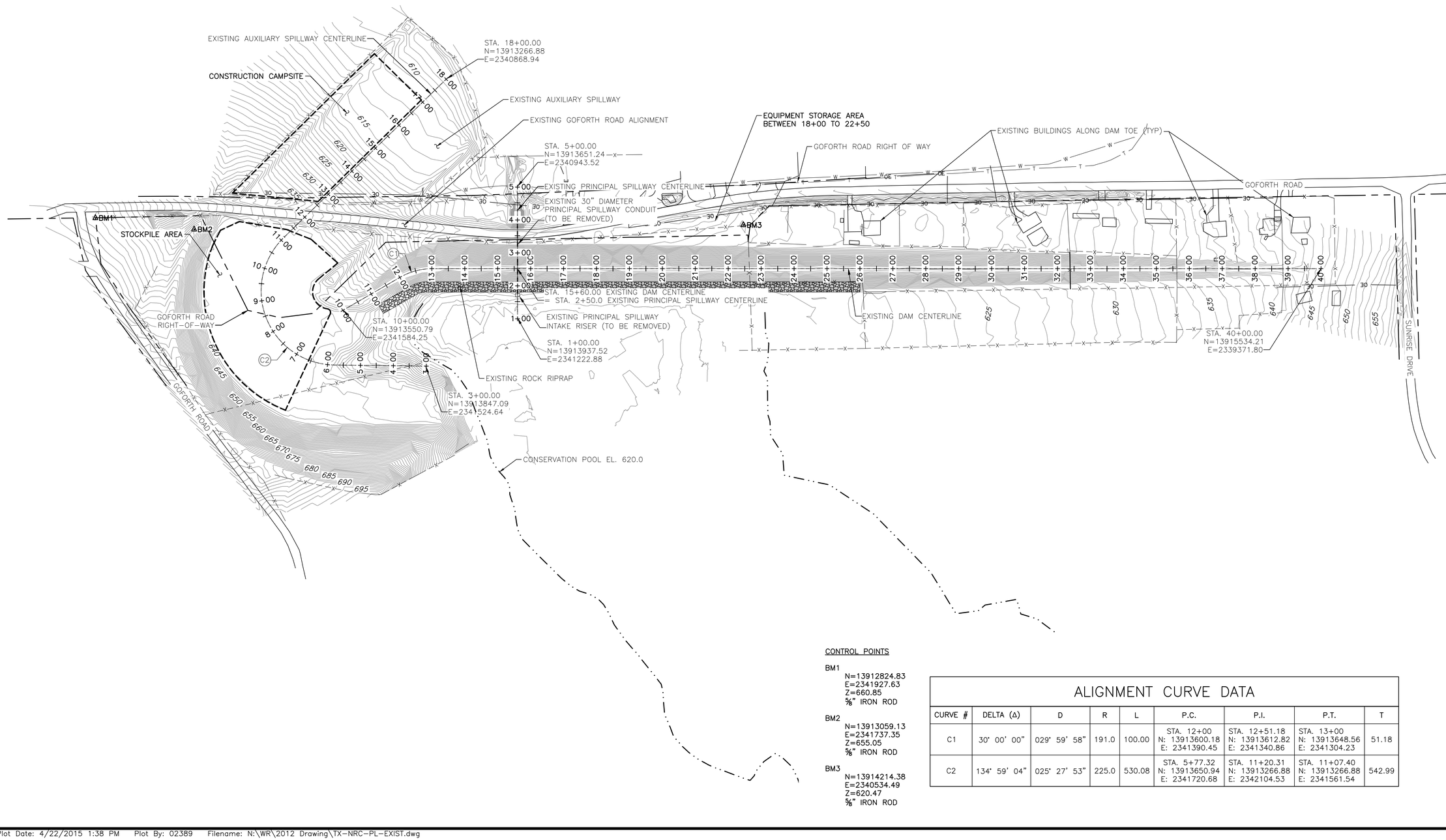

CONTROL POINTS

BM1
N=13912824.83
E=2341927.63
Z=660.85
⅝" IRON ROD

BM2
N=13913059.13
E=2341737.35
Z=655.05
⅝" IRON ROD

BM3
N=13914214.38
E=2340534.49
Z=620.47
⅝" IRON ROD

ALIGNMENT CURVE DATA

CURVE #	DELTA (Δ)	D	R	L	P.C.	P.I.	P.T.	T
C1	30° 00' 00"	029° 59' 58"	191.0	100.00	STA. 12+00 N: 13913600.18 E: 2341390.45	STA. 12+51.18 N: 13913612.82 E: 2341340.86	STA. 13+00 N: 13913648.56 E: 2341304.23	51.18
C2	134° 59' 04"	025° 27' 53"	225.0	530.08	STA. 5+77.32 N: 13913650.94 E: 2341720.68	STA. 11+20.31 N: 13913266.88 E: 2342104.53	STA. 11+07.40 N: 13913266.88 E: 2341561.54	542.99

Freese and Nichols, Inc.
Texas Registered Engineering Firm F-2144

STATE OF TEXAS
DUSTIN G. MORTENSEN
100000
LICENSED
PROFESSIONAL ENGINEER
4-23-2015

DESIGNED BY: JWE
DRAWN BY: CJG
CHECKED BY: DGM
FILE NAME: TX-NRC-PL-EXIST.dwg
DATE CHECKED: 4/22/2015

EXISTING SITE PLAN

FLOODWATER RETARDING STRUCTURE NO. 6 REHABILITATION
PLUM CREEK WATERSHED
OF THE
PLUM CREEK WATER, TEXAS

NRCS
United States Department of Agriculture
Natural Resources Conservation Service

REVISIONS DATE

DRAWING NO.
TX-EN-0650

SHEET
C-1

ACAD Rel: 19.1s (LMS Tech)
Filename: N:\WR\2012 Drawing\TX-NRC-PL-EXIST.dwg
Last Saved: 4/8/2015 10:46 AM Saved By: 02389

Plot Date: 4/22/2015 1:38 PM Plot By: 02389 Filename: N:\WR\2012 Drawing\TX-NRC-PL-EXIST.dwg

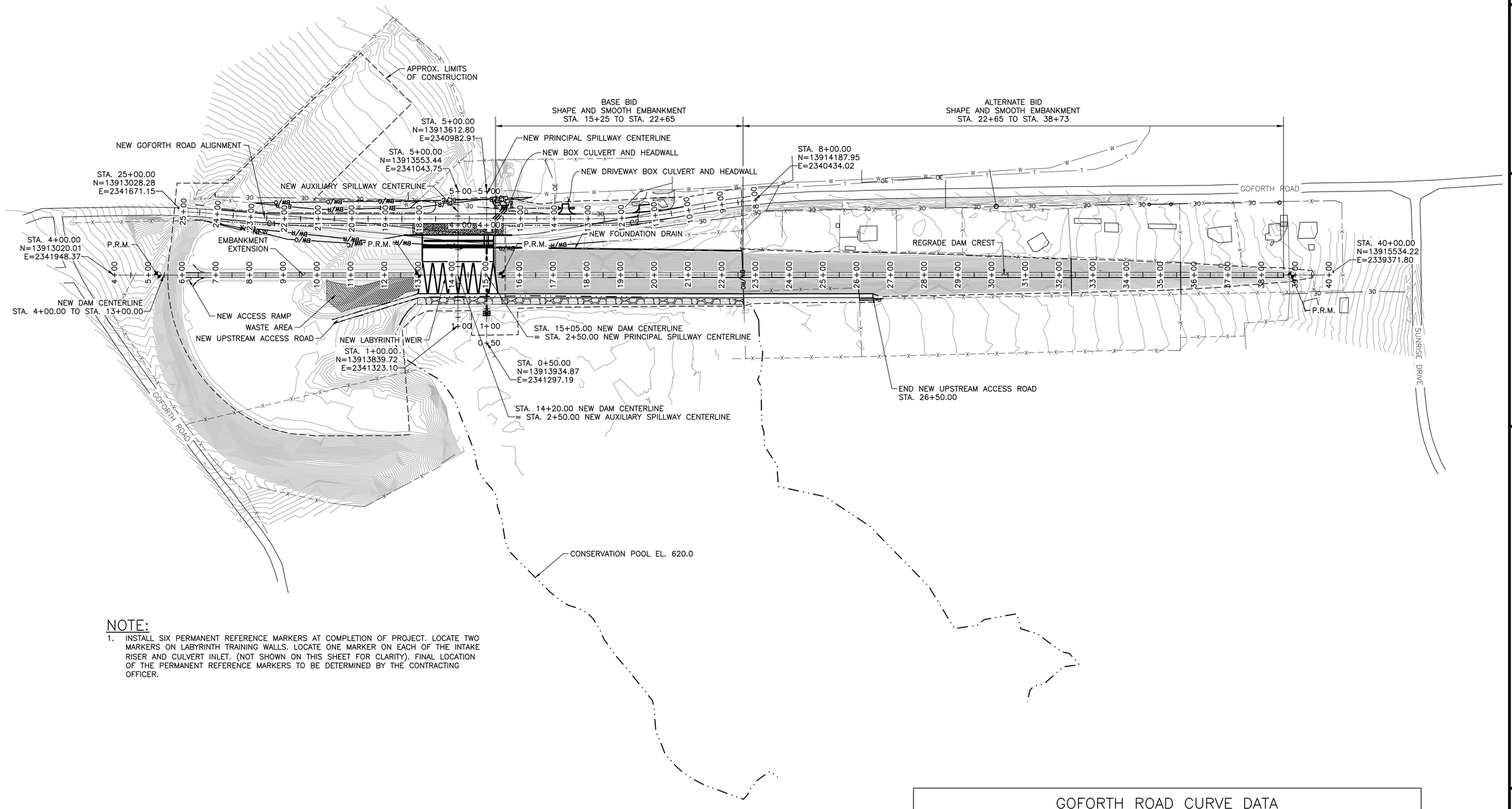

NOTE:

1. INSTALL SIX PERMANENT REFERENCE MARKERS AT COMPLETION OF PROJECT. LOCATE TWO MARKERS ON LABYRINTH TRAINING WALLS. LOCATE ONE MARKER ON EACH OF THE INTAKE RISER AND CULVERT INLET. (NOT SHOWN ON THIS SHEET FOR CLARITY). FINAL LOCATION OF THE PERMANENT REFERENCE MARKERS TO BE DETERMINED BY THE CONTRACTING OFFICER.

GOFORTH ROAD CURVE DATA

CURVE #	DELTA (Δ)	D	R	L	P.C.	P.I.	P.T.	T
C1	5° 10' 30.83"	003° 58' 43.94"	1440.00	130.07	STA. 21+77.5 N: 13913267.87 E: 2341455.43	STA. 22+42.6 N: 13913222.42 E: 2341502.01	STA. 23+07.6 N: 13913172.95 E: 2341544.30	65.08
C2	10° 36' 45.55"	003° 58' 43.94"	1440.00	266.73	STA. 10+00 N: 13914071.53 E: 2340596.57	STA. 11+33.7 N: 13913997.35 E: 2340707.86	STA. 12+66.7 N: 13913903.94 E: 2340803.59	133.75

Freese and Nichols, Inc.
Texas Registered Engineering Firm F-2144

STATE OF TEXAS
DUSTIN G. MORTENSEN
100000
LICENSED
PROFESSIONAL ENGINEER
4-23-2015

DESIGNED BY:	JWE
DRAWN BY:	CJG
CHECKED BY:	DGM
FILE NAME:	TX-NRC-PL-PROP.dwg
DATE CHECKED:	4/22/2015

PROPOSED SITE PLAN

FLOODWATER RETARDING STRUCTURE NO. 6 REHABILITATION
PLUM CREEK WATERSHED
OF THE
PLUM CREEK WATER, TEXAS

United States Department of Agriculture
Natural Resources Conservation Service

REVISIONS DATE

DRAWING NO.
TX-EN-0650

SHEET
C-2

ACAD Rel: 19.1s (LMS Tech)
Filename: N:\WR\2012 Drawing\TX-NRC-PL-PROP.dwg
Last Saved: 4/16/2015 9:03 AM Saved By: 02389

Plot Date: 4/22/2015 1:39 PM Plot By: 02389 Filename: N:\WR\2012 Drawing\TX-NRC-PL-PROP.dwg

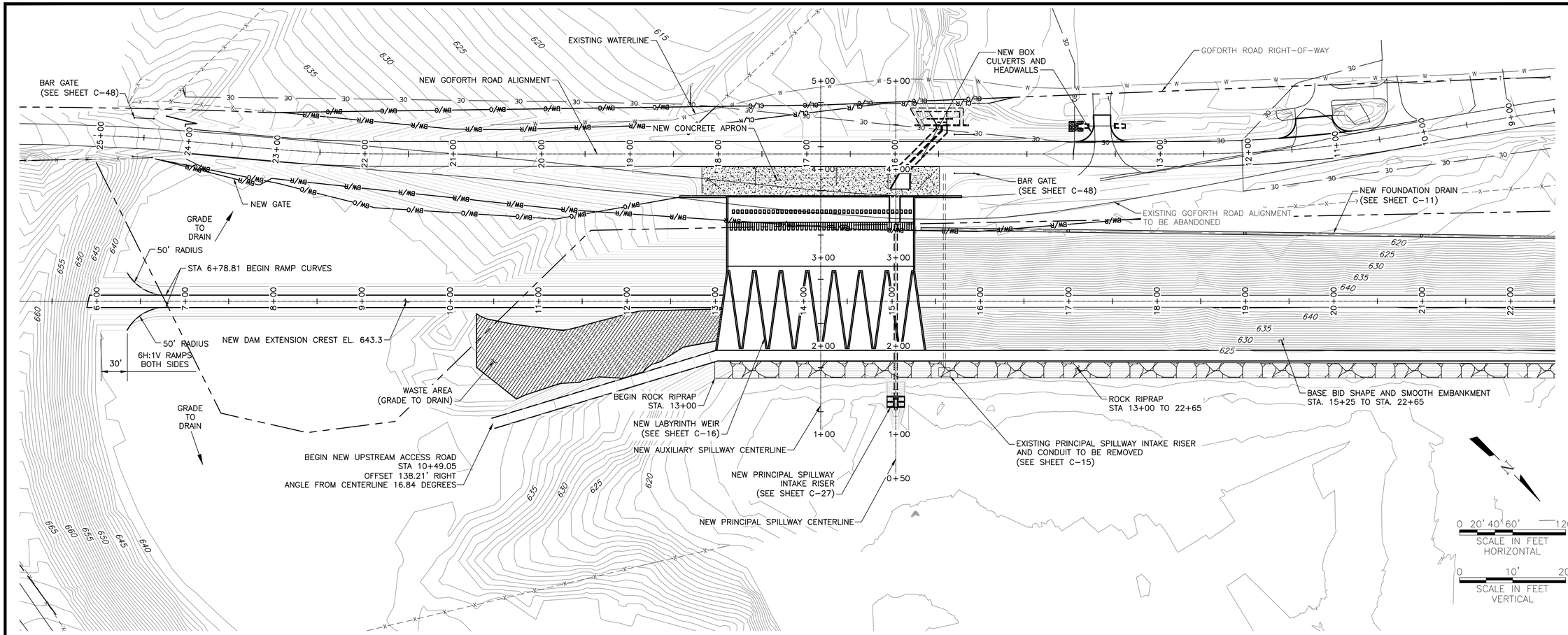

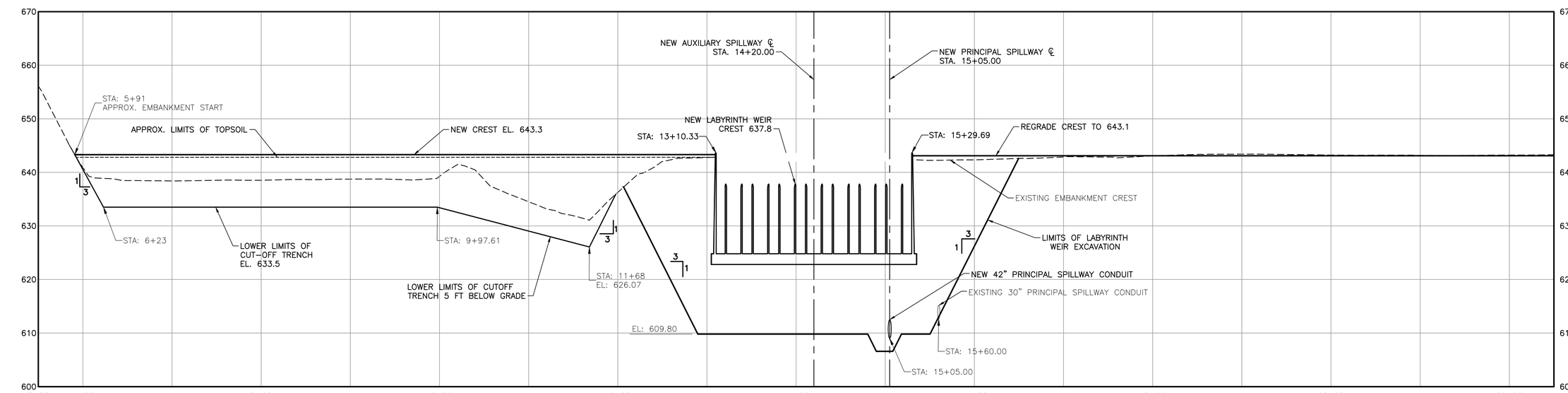

PROFILE ON DAM CENTERLINE

Freese and Nichols, Inc.
Texas Registered Engineering Firm F-2144
STATE OF TEXAS
DUSTIN G. MORTENSEN
100000
LICENSED
PROFESSIONAL
ENGINEER
4-23-2015

DESIGNED BY:	JWE
DRAWN BY:	CJG
CHECKED BY:	DGM
FILE NAME:	TX-NRC-PP-SITE01.dwg
DATE CHECKED:	4/22/2015

DAM PLAN AND PROFILE STA. 5+50 TO 22+50

FLOODWATER RETARDING STRUCTURE NO. 6 REHABILITATION
PLUM CREEK WATERSHED
OF THE
PLUM CREEK WATER, TEXAS

United States Department of Agriculture
Natural Resources Conservation Service

REVISIONS	DATE

DRAWING NO.
TX-EN-0650

SHEET
C-3

ACAD Rel: 19.1s (LMS Tech)
Filename: N:\WR\2012 Drawing\TX-NRC-PP-SITE01.dwg
Last Saved: 4/13/2015 12:50 PM Saved By: 02389

Plot Date: 4/22/2015 1:39 PM Plot By: 02389 Filename: N:\WR\2012 Drawing\TX-NRC-PP-SITE01.dwg

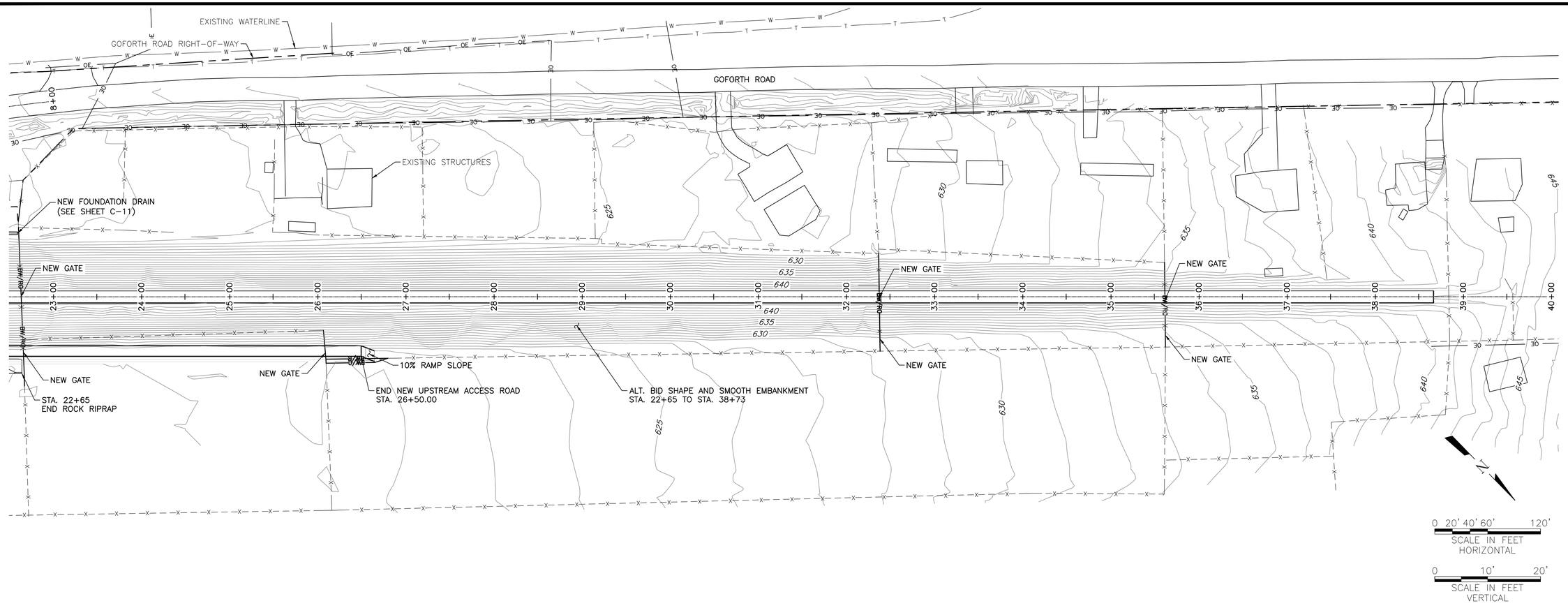

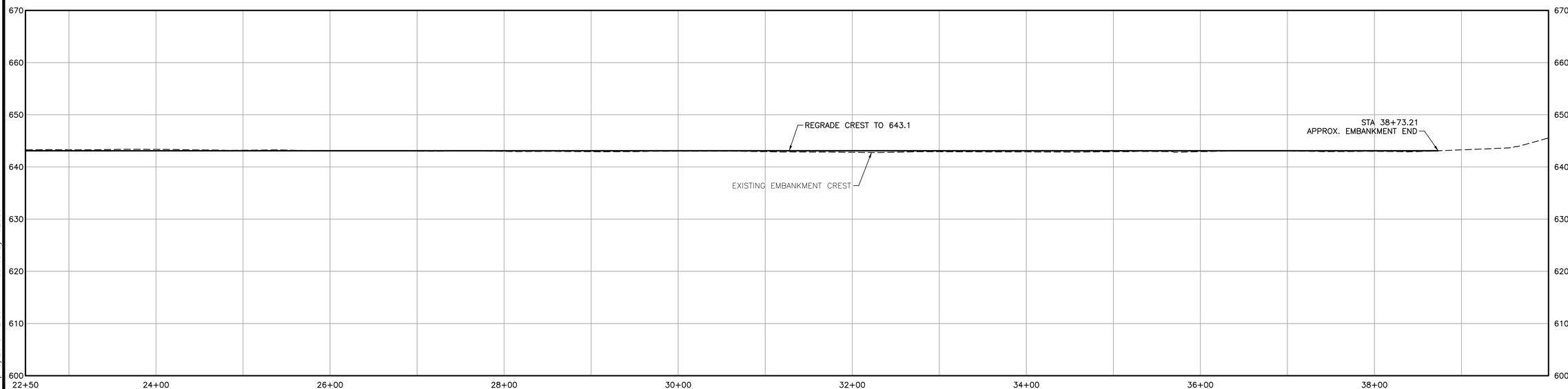

PROFILE ON DAM CENTERLINE

Freese and Nichols, Inc.
Texas Registered Engineering Firm F-2144

STATE OF TEXAS
DUSTIN G. MORTENSEN
100000
LICENSED
PROFESSIONAL ENGINEER
4-23-2015

DESIGNED BY:	JWE
DRAWN BY:	CJG
CHECKED BY:	DGM
FILE NAME:	TX-NRC-PP-SITE01.dwg
DATE CHECKED:	4/22/2015

DAM PLAN AND PROFILE STA. 22+50 TO 40+00

FLOODWATER RETARDING STRUCTURE NO. 6 REHABILITATION
PLUM CREEK WATERSHED
OF THE
PLUM CREEK WATER, TEXAS

United States Department of Agriculture
Natural Resources Conservation Service

REVISIONS	DATE

DRAWING NO.
TX-EN-0650

SHEET
C-4

ACAD Rel: 19.1s (LMS Tech)
Filename: N:\WR\2012 Drawing\TX-NRC-PP-SITE01.dwg
Last Saved: 4/13/2015 12:50 PM Saved By: 02389

Plot Date: 4/22/2015 1:39 PM Plot By: 02389 Filename: N:\WR\2012 Drawing\TX-NRC-PP-SITE01.dwg

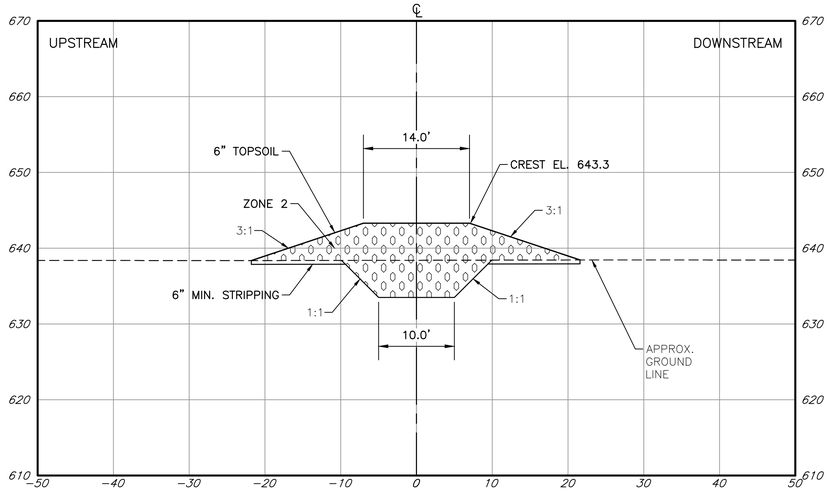

TYPICAL EMBANKMENT SECTION
STA 6+78 TO 12+00

0 10' 20'
SCALE IN FEET

NOTES:

1. 6" OF TOPSOIL SHALL BE PLACED ON NEW EMBANKMENT FILL
2. ALL GRADES SHOWN ARE INCLUDING TOPSOIL

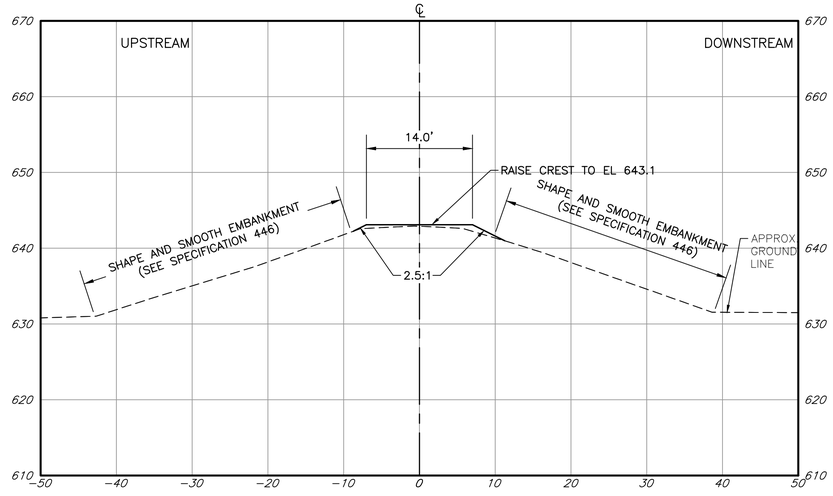

TYPICAL EMBANKMENT SECTION
STA 22+60 TO 38+73

0 10' 20'
SCALE IN FEET

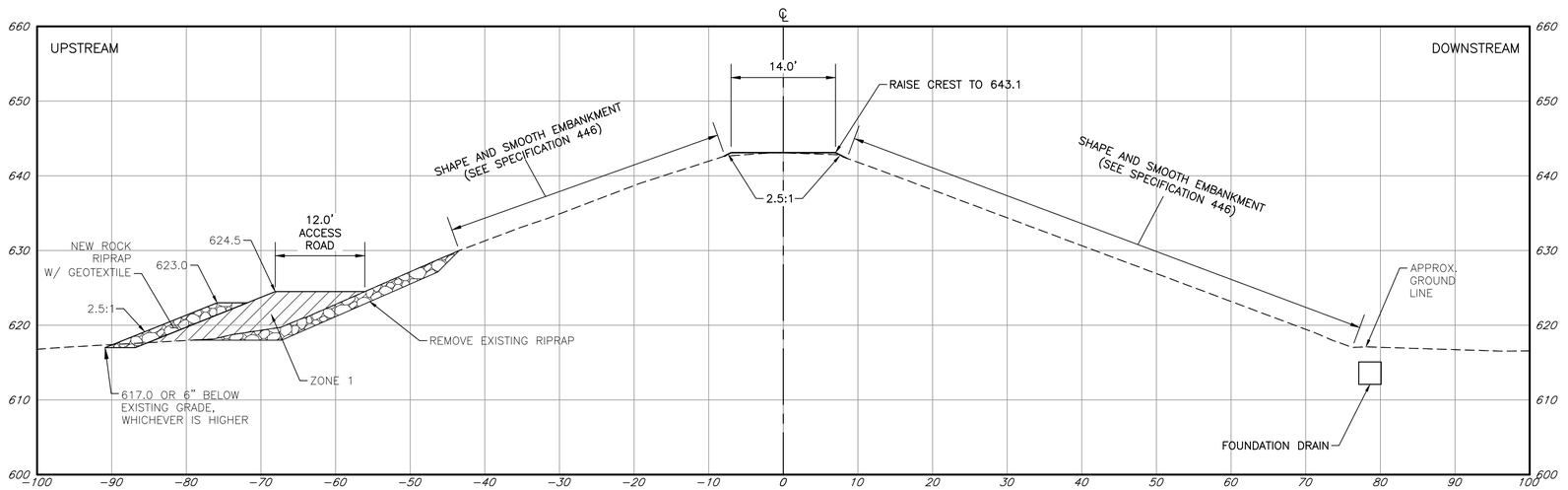

TYPICAL EMBANKMENT SECTION
RIGHT EDGE OF LABYRINTH TO STA. 22+60

0 10' 20'
SCALE IN FEET

NOTE:

THE SALVAGED ROCK RIPRAP THAT MEETS THE REQUIREMENTS OF SPECIFICATION 61 MAY BE USED AS THE NEW ROCK RIPRAP.

Freese and Nichols, Inc.
Texas Registered Engineering Firm F-2144

STATE OF TEXAS
DUSTIN G. MORTENSEN
100000
LICENSED
PROFESSIONAL ENGINEER

Dustin Mortensen 4-23-2015

DESIGNED BY: JWE
DRAWN BY: CJG
CHECKED BY: DGM
FILE NAME: TX-NRC-XS-SECT01.dwg
DATE CHECKED: 4/22/2015

TYPICAL EMBANKMENT CROSS-SECTIONS

FLOODWATER RETARDING STRUCTURE NO. 6 REHABILITATION
PLUM CREEK WATERSHED
OF THE
PLUM CREEK WATER, TEXAS

NRCS
United States Department of Agriculture
Natural Resources Conservation Service

REVISIONS DATE

DRAWING NO.
TX-EN-0650

SHEET
C-5

ACAD Rel: 19.1s (LMS Tech)
Filename: N:\WR\2012 Drawing\TX-NRC-XS-SECT01.dwg
Last Saved: 4/22/2015 1:35 PM Saved By: 02389

Plot Date: 4/22/2015 1:40 PM Plot By: 02389 Filename: N:\WR\2012 Drawing\TX-NRC-XS-SECT01.dwg

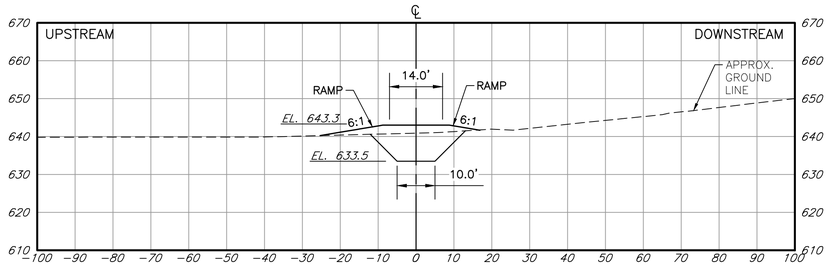

STA. 6+00

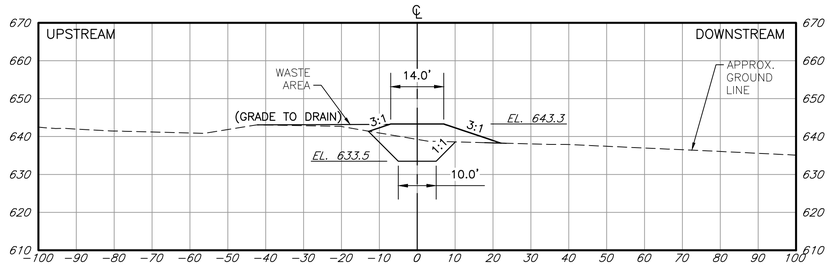

STA. 10+00

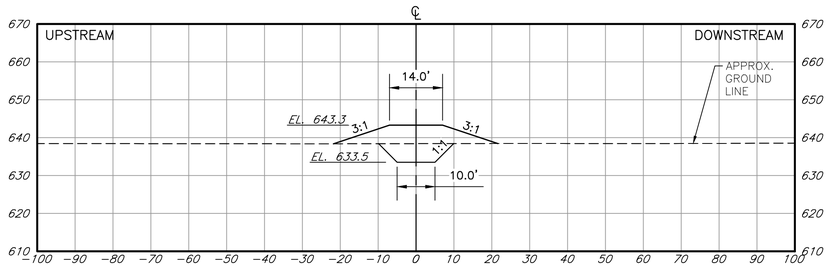

STA. 7+00

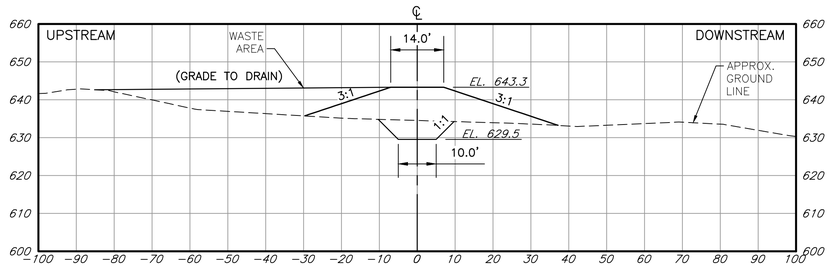

STA. 11+00

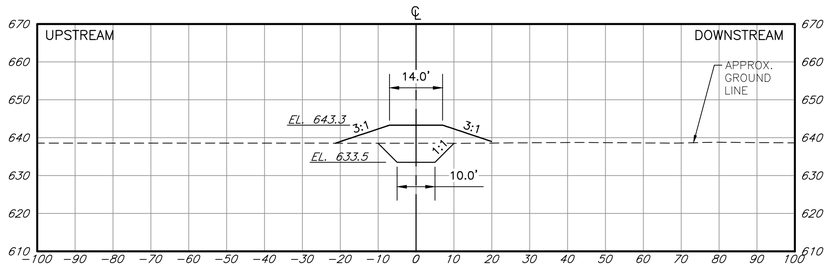

STA. 8+00

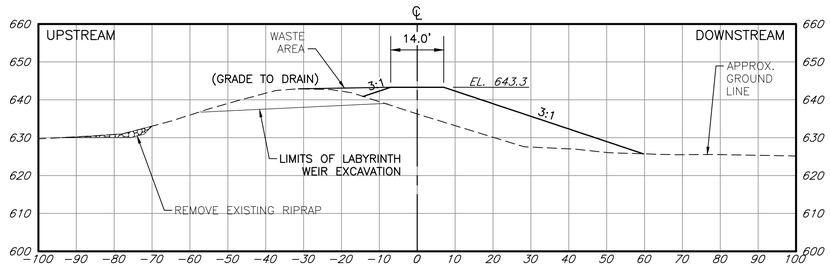

STA. 12+00

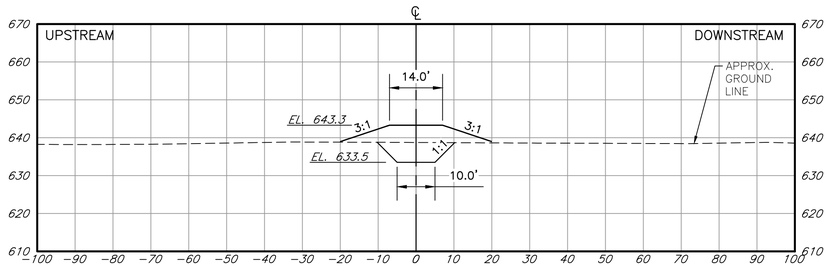

STA. 9+00

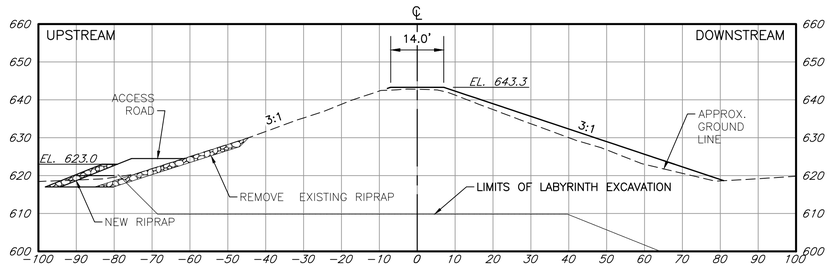

STA. 13+00

0 20' 40'
SCALE IN FEET

Freese and Nichols, Inc.
Texas Registered Engineering Firm F-2144

STATE OF TEXAS
DUSTIN G. MORTENSEN
100000
LICENSED
PROFESSIONAL ENGINEER
4-23-2015

DESIGNED BY:	JWE
DRAWN BY:	CJG
CHECKED BY:	DGM
FILE NAME:	TX-NRC-XS-SECT01.dwg
DATE CHECKED:	4/22/2015

EMBANKMENT CROSS-SECTIONS STA. 6+00 TO 13+00

FLOODWATER RETARDING STRUCTURE NO. 6 REHABILITATION
PLUM CREEK WATERSHED
OF THE
PLUM CREEK WATER, TEXAS

NRCS
United States Department of Agriculture
Natural Resources Conservation Service

REVISIONS	DATE

DRAWING NO.
TX-EN-0650

SHEET
C-6

ACAD Rel: 19.1s (LMS Tech)
Filename: N:\WR\2012 Drawing\TX-NRC-XS-SECT01.dwg
Last Saved: 4/22/2015 1:35 PM Saved By: 02389

Plot Date: 4/22/2015 1:40 PM Plot By: 02389 Filename: N:\WR\2012 Drawing\TX-NRC-XS-SECT01.dwg

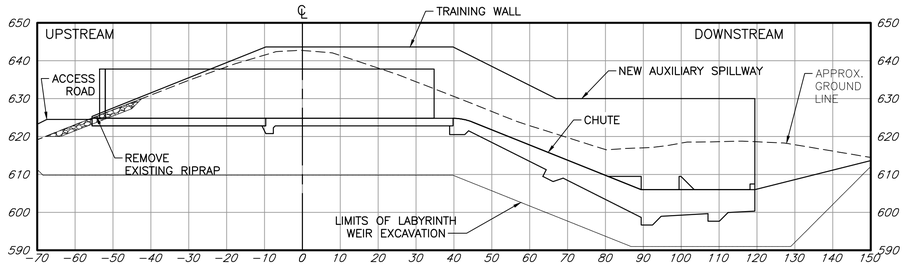

STA. 14+00

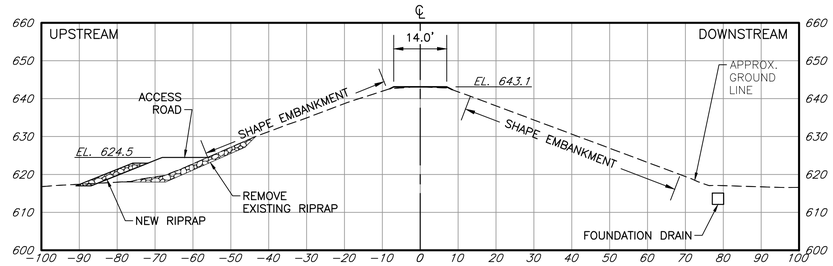

STA. 18+00

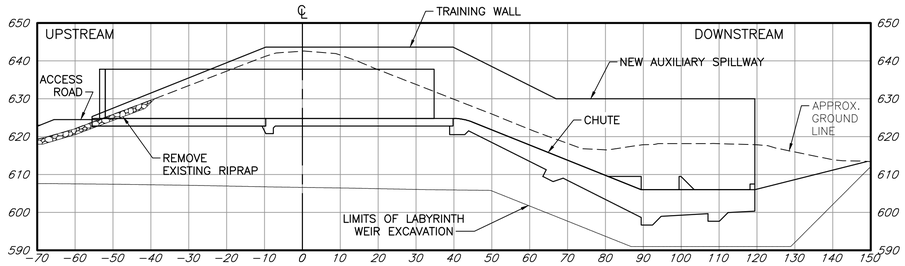

STA. 15+00

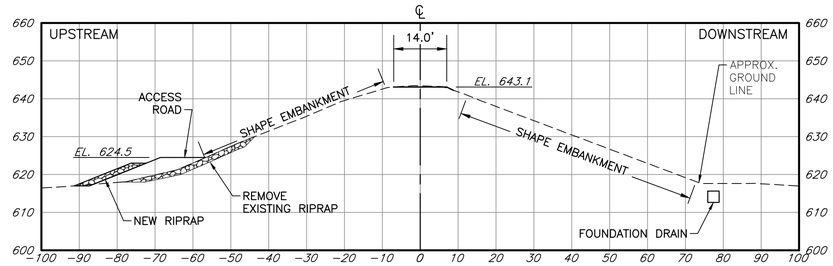

STA. 19+00

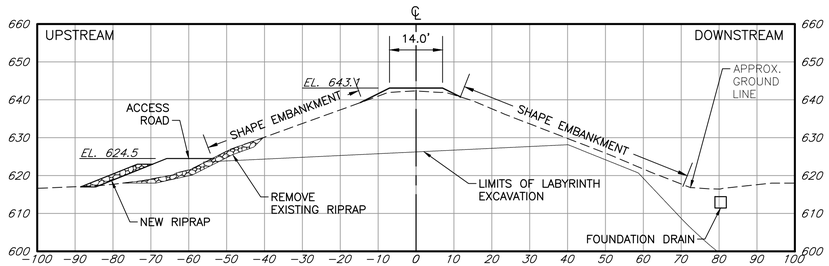

STA. 16+00

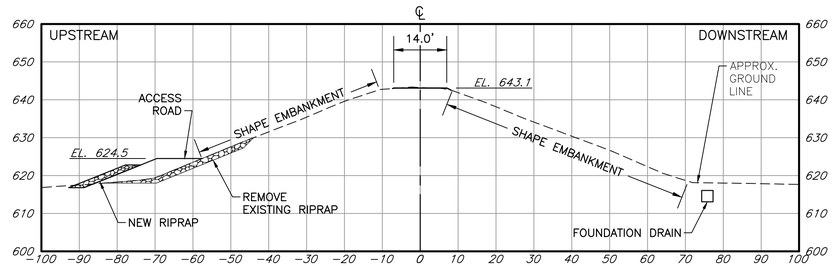

STA. 20+00

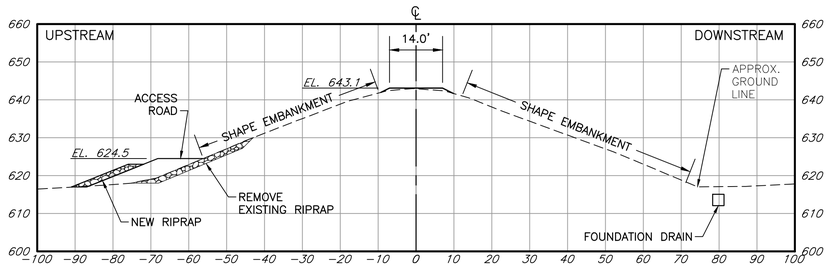

STA. 17+00

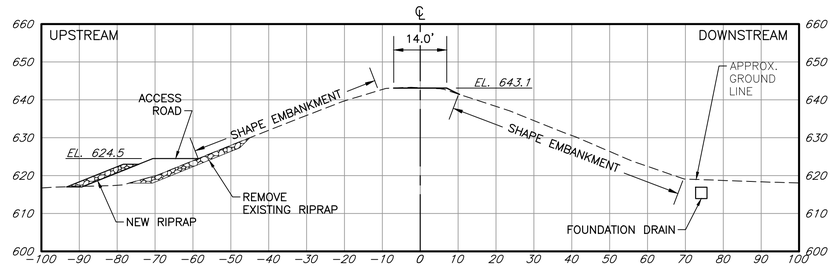

STA. 21+00

0 20' 40'
SCALE IN FEET

Freese and Nichols, Inc.
Texas Registered Engineering Firm F-2144

STATE OF TEXAS
DUSTIN G. MORTENSEN
100000
LICENSED
PROFESSIONAL ENGINEER
4-23-2015

DESIGNED BY: JWE
DRAWN BY: CJG
CHECKED BY: DGM
FILE NAME: TX-NRC-XS-SECT01.dwg
DATE CHECKED: 4/22/2015

EMBANKMENT CROSS-SECTIONS STA. 14+00 TO 21+00

FLOODWATER RETARDING STRUCTURE NO. 6 REHABILITATION
PLUM CREEK WATERSHED
OF THE
PLUM CREEK WATER, TEXAS

NRCS
United States Department of Agriculture
Natural Resources Conservation Service

REVISIONS DATE

DRAWING NO.
TX-EN-0650

SHEET
C-7

ACAD Rel: 19.1s (LMS Tech)
Filename: N:\WR\2012 Drawing\TX-NRC-XS-SECT01.dwg
Last Saved: 4/22/2015 1:35 PM Saved By: 02389

Plot Date: 4/22/2015 1:40 PM Plot By: 02389 Filename: N:\WR\2012 Drawing\TX-NRC-XS-SECT01.dwg

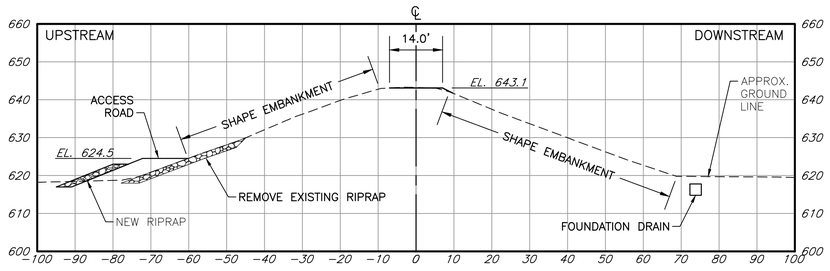

STA. 22+00

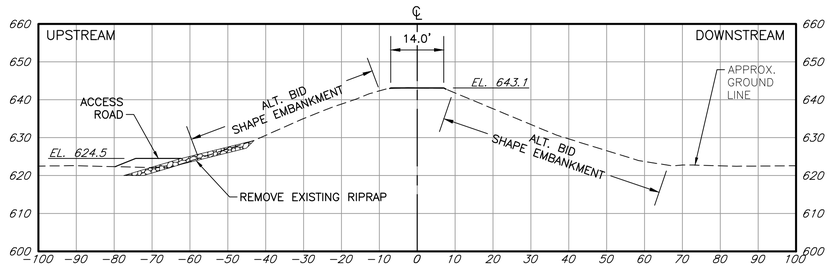

STA. 26+00

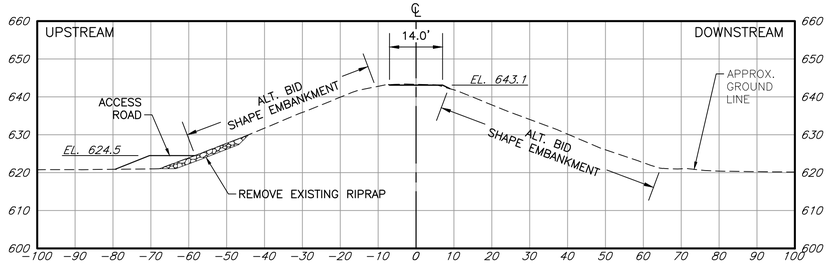

STA. 23+00

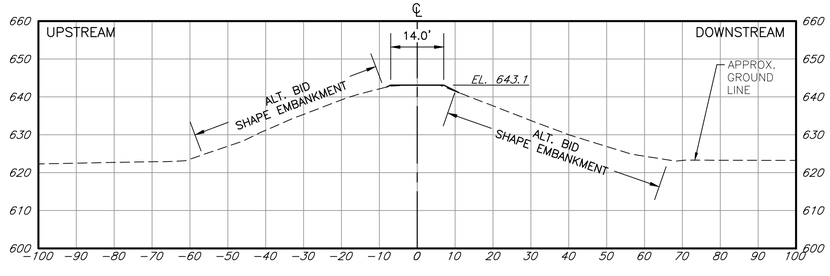

STA. 27+00

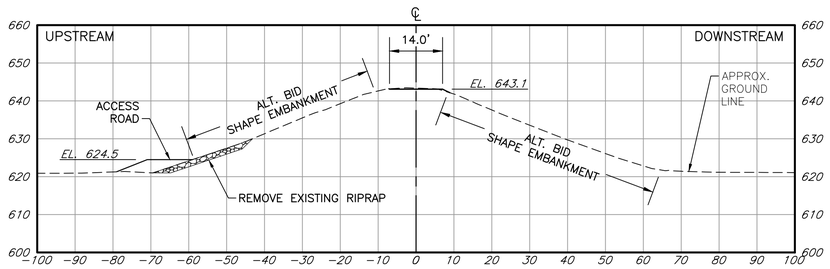

STA. 24+00

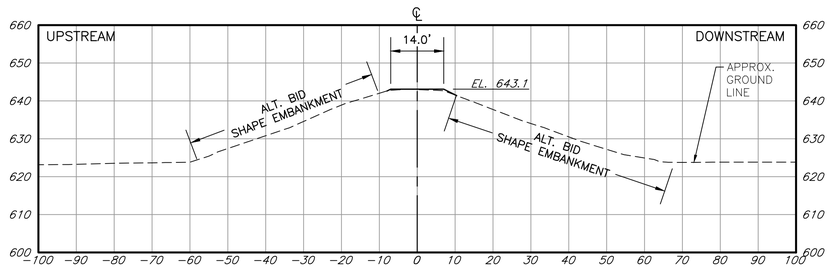

STA. 28+00

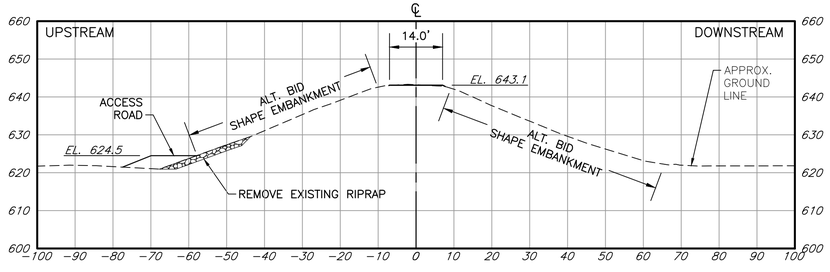

STA. 25+00

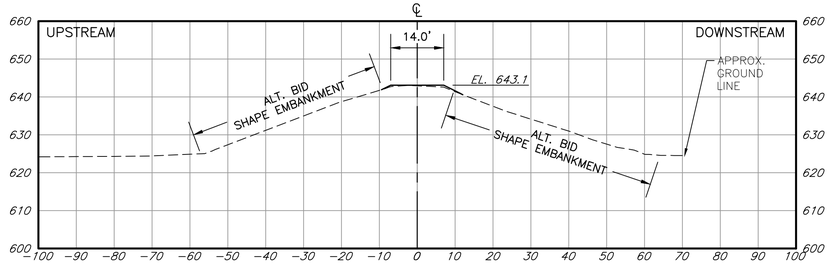

STA. 29+00

0 20' 40'
SCALE IN FEET

Frans and Nichols, Inc.
Texas Registered Engineering Firm F-2144

STATE OF TEXAS
DUSTIN G. MORTENSEN
100000
LICENSED
PROFESSIONAL ENGINEER
4-23-2015

DESIGNED BY:	JWE
DRAWN BY:	CJG
CHECKED BY:	DGM
FILE NAME:	TX-NRC-XS-SECT01.dwg
DATE CHECKED:	4/22/2015

EMBANKMENT CROSS-SECTIONS STA. 22+00 TO 29+00

FLOODWATER RETARDING STRUCTURE NO. 6 REHABILITATION
PLUM CREEK WATERSHED
OF THE
PLUM CREEK WATER, TEXAS

NRCS
United States Department of Agriculture
Natural Resources Conservation Service

REVISIONS	DATE

DRAWING NO.
TX-EN-0650

SHEET
C-8

ACAD Rel: 19.1s (LMS Tech)
Filename: N:\WR\2012 Drawing\TX-NRC-XS-SECT01.dwg
Last Saved: 4/22/2015 1:35 PM Saved By: 02389

Plot Date: 4/22/2015 1:40 PM Plot By: 02389 Filename: N:\WR\2012 Drawing\TX-NRC-XS-SECT01.dwg

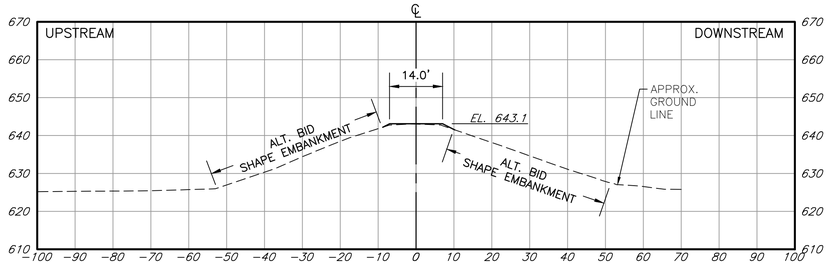

STA. 30+00

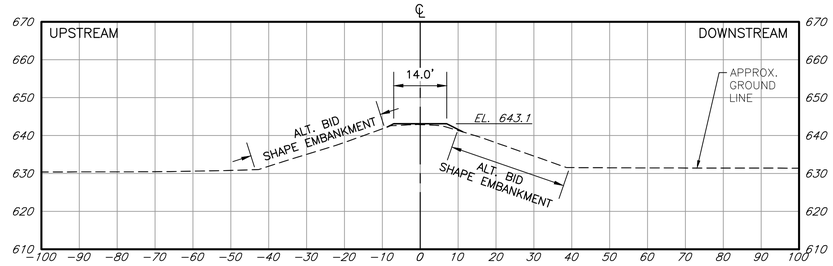

STA. 34+00

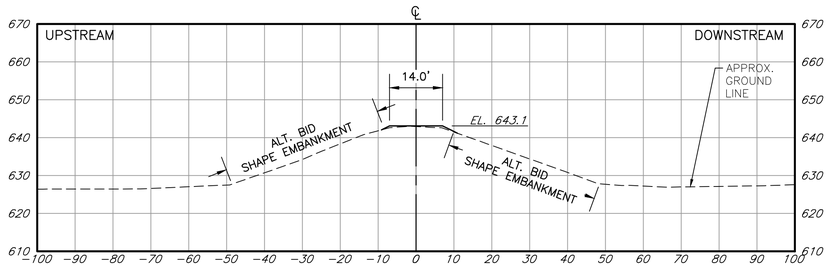

STA. 31+00

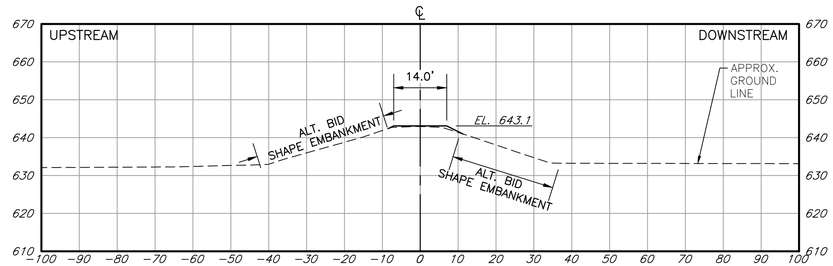

STA. 35+00

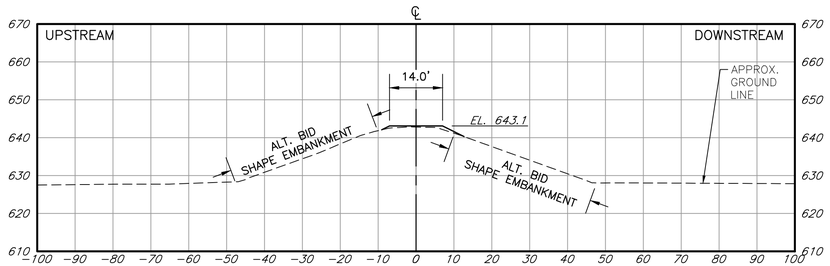

STA. 32+00

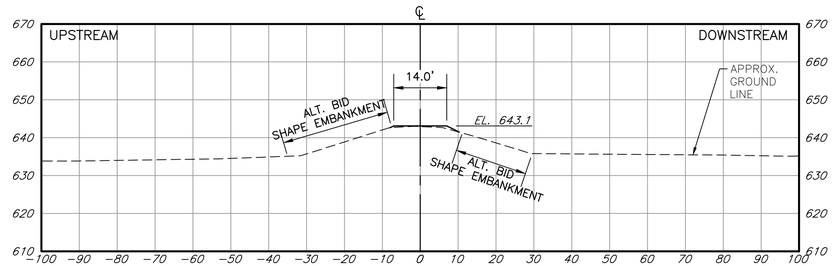

STA. 36+00

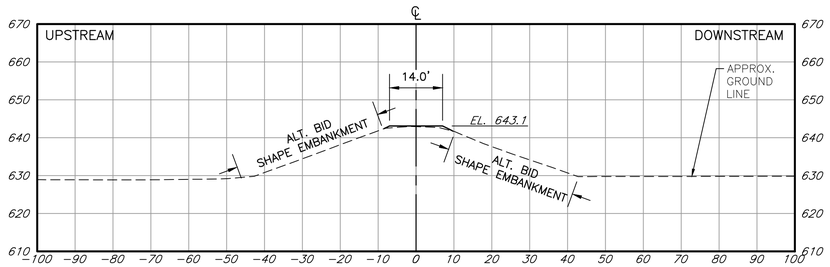

STA. 33+00

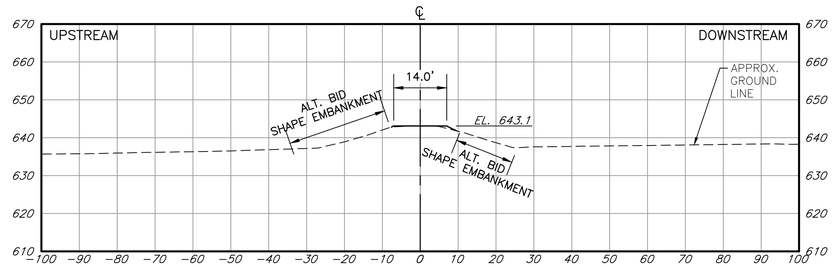

STA. 37+00

0 20' 40'
SCALE IN FEET

Freese and Nichols, Inc.
Texas Registered Engineering Firm F-2144

STATE OF TEXAS
DUSTIN G. MORTENSEN
100000
LICENSED
PROFESSIONAL ENGINEER

Dustin Mortensen 4-23-2015

DESIGNED BY:	JWE
DRAWN BY:	CJG
CHECKED BY:	DGM
FILE NAME:	TX-NRC-XS-SECT01.dwg
DATE CHECKED:	4/22/2015

EMBANKMENT CROSS-SECTIONS STA. 30+00 TO 37+00

FLOODWATER RETARDING STRUCTURE NO. 6 REHABILITATION
PLUM CREEK WATERSHED
OF THE
PLUM CREEK WATER, TEXAS

NRCS
United States Department of Agriculture
Natural Resources Conservation Service

REVISIONS	DATE

DRAWING NO.
TX-EN-0650

SHEET
C-9

ACAD Rel: 19.1s (LMS Tech)
Filename: N:\WR\2012 Drawing\TX-NRC-XS-SECT01.dwg
Last Saved: 4/22/2015 1:35 PM Saved By: 02389

Plot Date: 4/22/2015 1:40 PM Plot By: 02389 Filename: N:\WR\2012 Drawing\TX-NRC-XS-SECT01.dwg

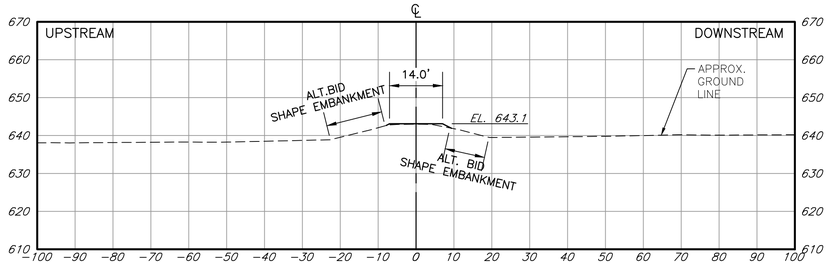

STA. 38+00

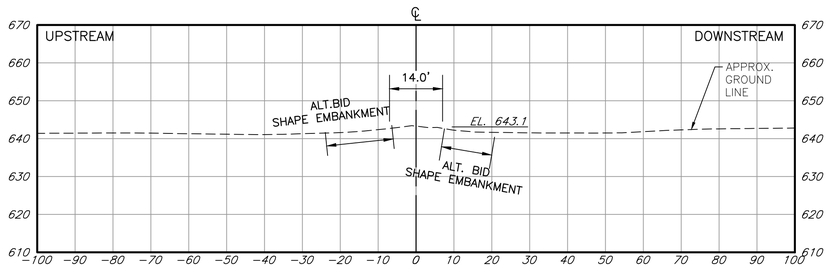

STA. 39+00

0 20' 40'
SCALE IN FEET

Prepared by:
Freese and Nichols, Inc.
Texas Registered Engineering Firm F-2144

STATE OF TEXAS
DUSTIN G. MORTENSEN
100000
LICENSED
PROFESSIONAL ENGINEER
4-23-2015

DESIGNED BY:	JWE
DRAWN BY:	CJG
CHECKED BY:	DGM
FILE NAME:	TX-NRC-XS-SECT01.dwg
DATE CHECKED:	4/22/2015

EMBANKMENT CROSS-SECTIONS STA. 38+00 TO 39+00

FLOODWATER RETARDING STRUCTURE NO. 6 REHABILITATION
PLUM CREEK WATERSHED
OF THE
PLUM CREEK WATER, TEXAS

NRCS
United States Department of Agriculture
Natural Resources Conservation Service

REVISIONS	DATE

DRAWING NO.
TX-EN-0650

SHEET
C-10

ACAD Rel: 19.1s (LMS Tech)
Filename: N:\WR\2012 Drawing\TX-NRC-XS-SECT01.dwg
Last Saved: 4/22/2015 1:35 PM Saved By: 02389

Plot Date: 4/22/2015 1:40 PM Plot By: 02389 Filename: N:\WR\2012 Drawing\TX-NRC-XS-SECT01.dwg

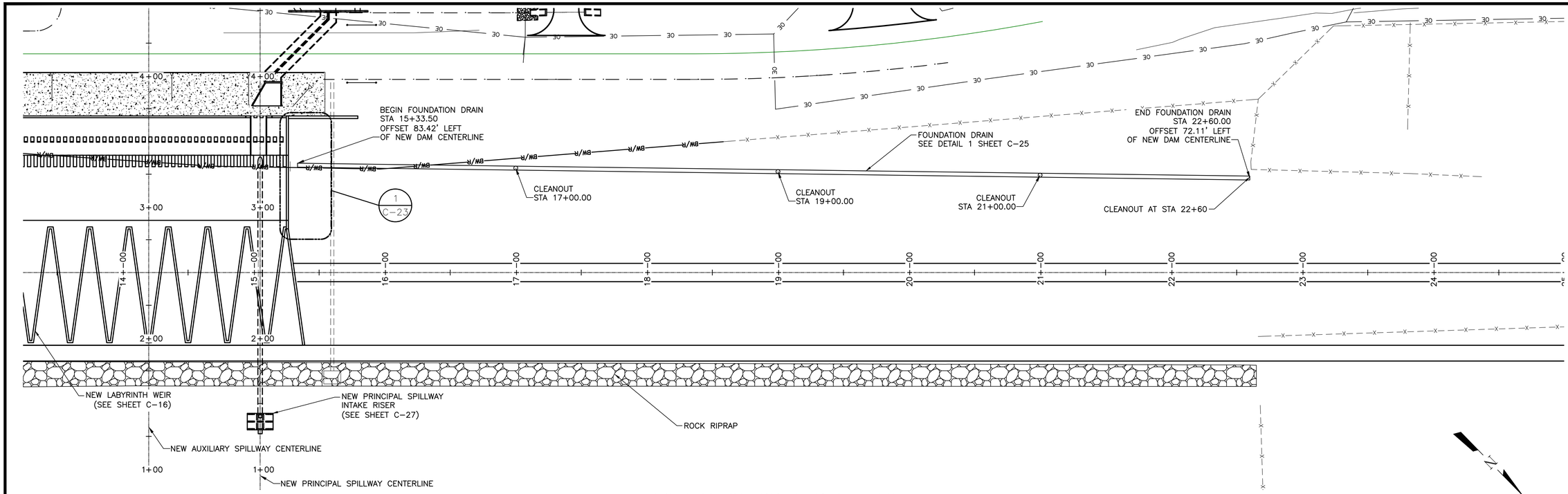

FOUNDATION DRAIN PLAN VIEW

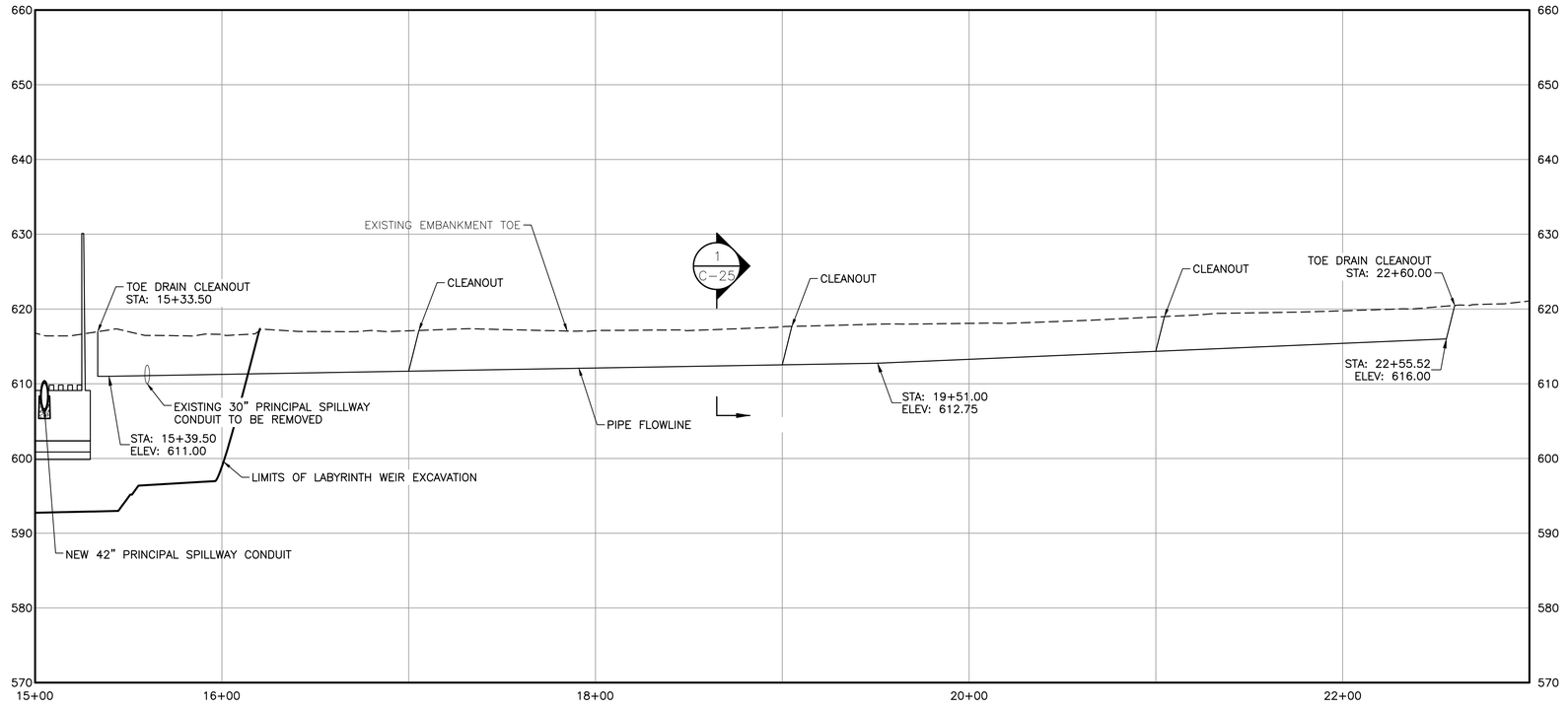

FOUNDATION DRAIN PROFILE

NOTE:
SEE DETAIL 4, SHEET C-25 FOR CLEANOUT DETAIL.

Texas and Nichols, Inc.
Texas Registered Engineering Firm F-2144

STATE OF TEXAS
DUSTIN G. MORTENSEN
100000
LICENSED
PROFESSIONAL ENGINEER
4-23-2015

DESIGNED BY:	JWE
DRAWN BY:	CJG
CHECKED BY:	DGM
FILE NAME:	TX-NRC-PP-TRENCH.dwg
DATE CHECKED:	4/22/2015

FOUNDATION DRAIN - PLAN AND PROFILE

FLOODWATER RETARDING STRUCTURE NO. 6 REHABILITATION
PLUM CREEK WATERSHED
OF THE
PLUM CREEK WATER, TEXAS

United States Department of Agriculture
Natural Resources Conservation Service

REVISIONS	DATE

DRAWING NO.
TX-EN-0650

SHEET
C-11

ACAD Rel: 19.1s (LMS Tech)
Filename: N:\WR\2012 Drawing\TX-NRC-PP-TRENCH.dwg
Last Saved: 4/13/2015 12:48 PM Saved By: 02389

Plot Date: 4/22/2015 1:40 PM Plot By: 02389 Filename: N:\WR\2012 Drawing\TX-NRC-PP-TRENCH.dwg

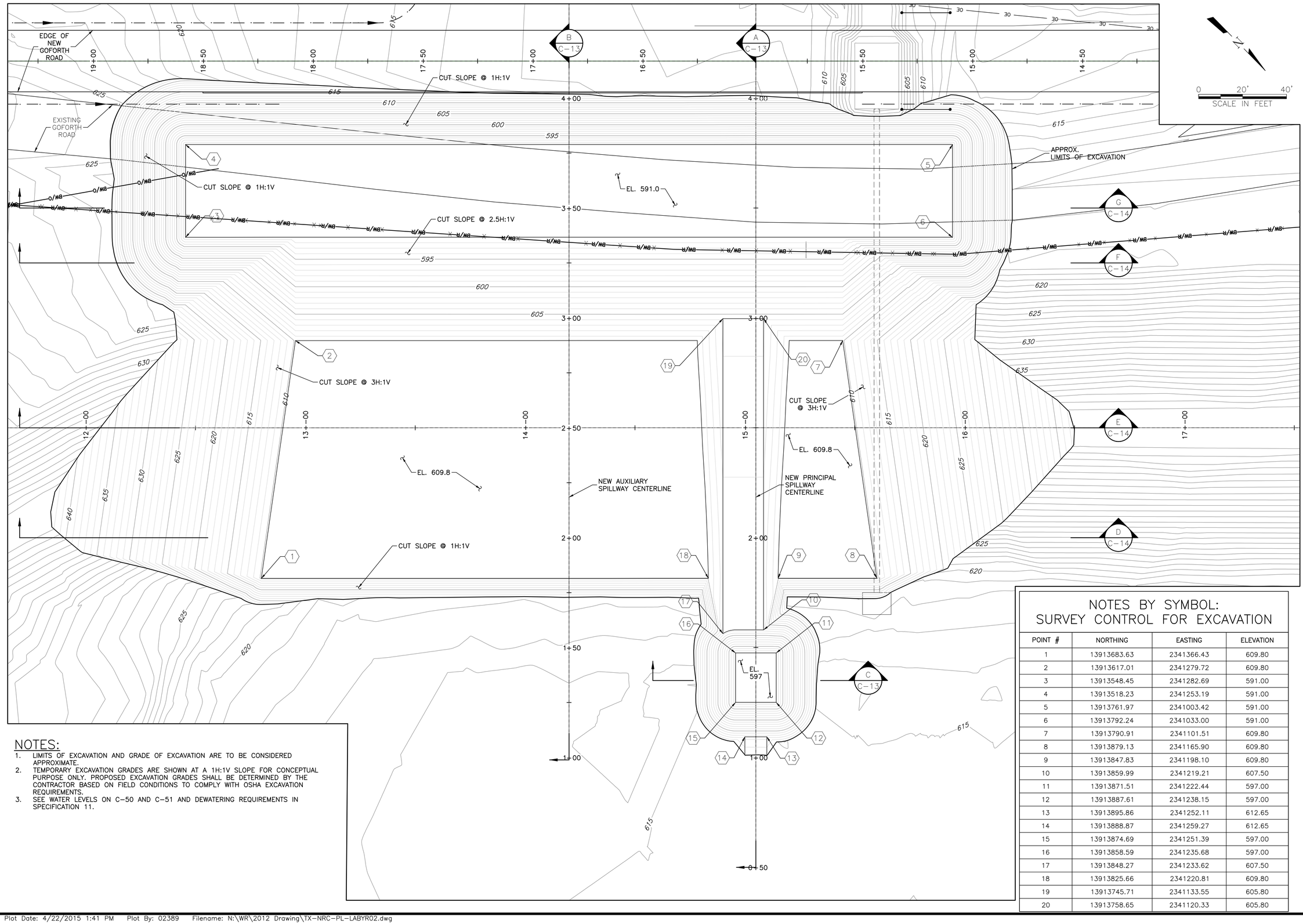

NOTES:

1. LIMITS OF EXCAVATION AND GRADE OF EXCAVATION ARE TO BE CONSIDERED APPROXIMATE.
2. TEMPORARY EXCAVATION GRADES ARE SHOWN AT A 1H:1V SLOPE FOR CONCEPTUAL PURPOSE ONLY. PROPOSED EXCAVATION GRADES SHALL BE DETERMINED BY THE CONTRACTOR BASED ON FIELD CONDITIONS TO COMPLY WITH OSHA EXCAVATION REQUIREMENTS.
3. SEE WATER LEVELS ON C-50 AND C-51 AND DEWATERING REQUIREMENTS IN SPECIFICATION 11.

NOTES BY SYMBOL: SURVEY CONTROL FOR EXCAVATION

POINT #	NORTHING	EASTING	ELEVATION
1	13913683.63	2341366.43	609.80
2	13913617.01	2341279.72	609.80
3	13913548.45	2341282.69	591.00
4	13913518.23	2341253.19	591.00
5	13913761.97	2341003.42	591.00
6	13913792.24	2341033.00	591.00
7	13913790.91	2341101.51	609.80
8	13913879.13	2341165.90	609.80
9	13913847.83	2341198.10	609.80
10	13913859.99	2341219.21	607.50
11	13913871.51	2341222.44	597.00
12	13913887.61	2341238.15	597.00
13	13913895.86	2341252.11	612.65
14	13913888.87	2341259.27	612.65
15	13913874.69	2341251.39	597.00
16	13913858.59	2341235.68	597.00
17	13913848.27	2341233.62	607.50
18	13913825.66	2341220.81	609.80
19	13913745.71	2341133.55	605.80
20	13913758.65	2341120.33	605.80

Freese and Nichols, Inc.
Texas Registered Engineering Firm F-2144
STATE OF TEXAS
DUSTIN G. MORTENSEN
100000
LICENSED
PROFESSIONAL ENGINEER
4-23-2015

DESIGNED BY: JWE
DRAWN BY: CJG
CHECKED BY: DGM
FILE NAME: TX-NRC-PL-LABYR02.dwg
DATE CHECKED: 4/22/2015

LABYRINTH WEIR EXCAVATION - PLAN VIEW

FLOODWATER RETARDING STRUCTURE NO. 6 REHABILITATION
PLUM CREEK WATERSHED
OF THE
PLUM CREEK WATER, TEXAS

United States Department of Agriculture
Natural Resources Conservation Service

REVISIONS DATE

DRAWING NO. TX-EN-0650

SHEET C-12

ACAD Rel: 19.1s (LMS Tech)
Filename: N:\WR\2012 Drawing\TX-NRC-PL-LABYR02.dwg
Last Saved: 4/8/2015 1:45 PM Saved By: 02389

Plot Date: 4/22/2015 1:41 PM Plot By: 02389 Filename: N:\WR\2012 Drawing\TX-NRC-PL-LABYR02.dwg

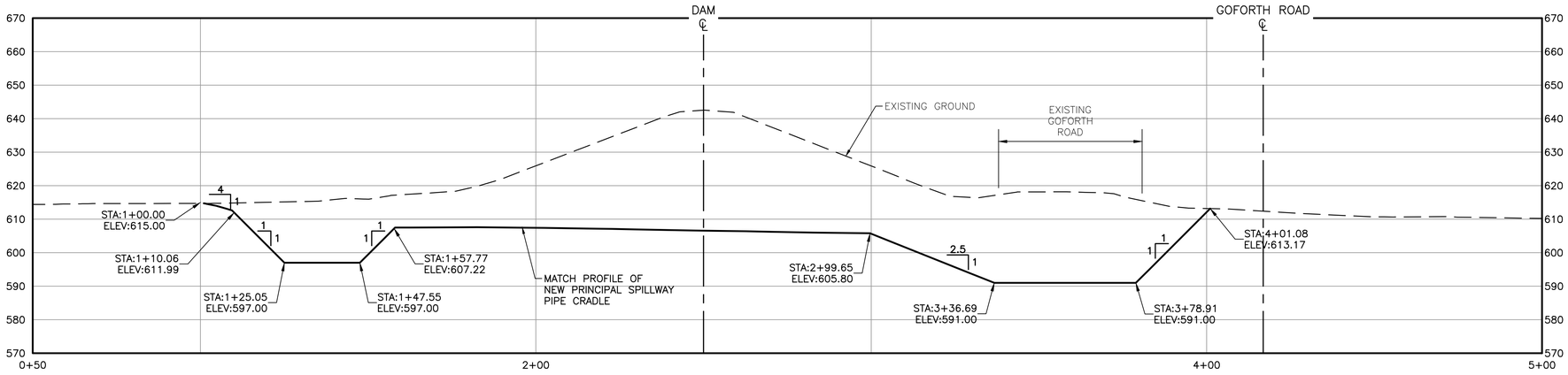

A
C-12

PRINCIPAL SPILLWAY CENTERLINE EXCAVATION SECTION

0 20' 40'
SCALE IN FEET

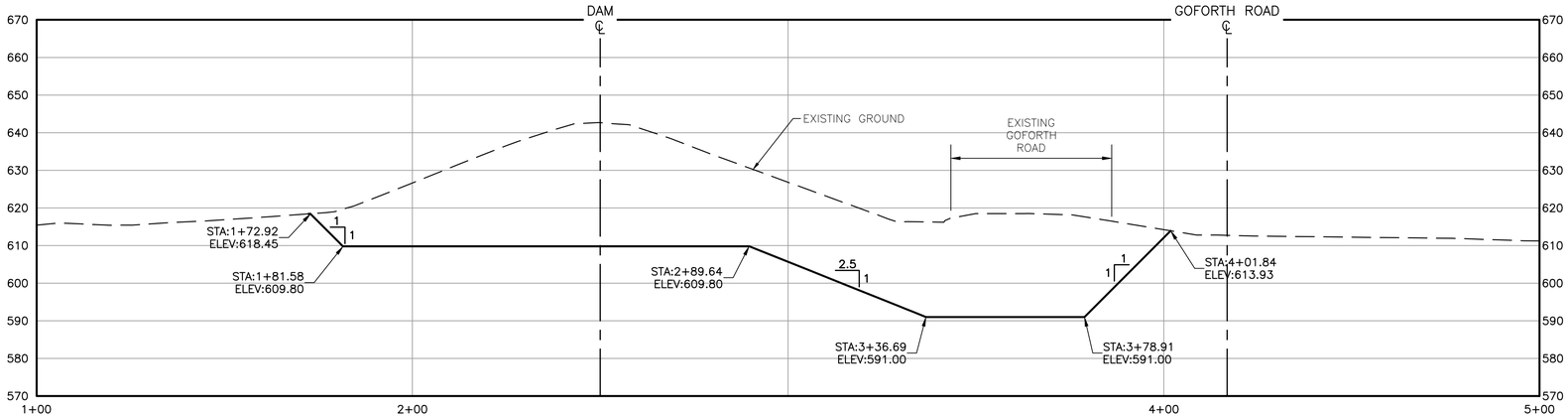

B
C-12

AUXILIARY SPILLWAY CENTERLINE EXCAVATION SECTION

0 20' 40'
SCALE IN FEET

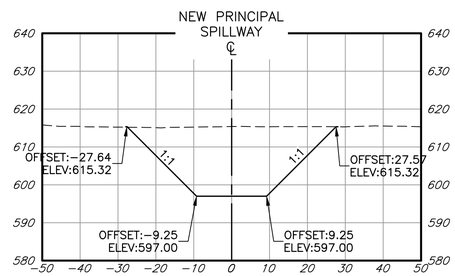

C
C-12

PRINCIPAL SPILLWAY EXCAVATION SECTION (STA 1+35)

0 20' 40'
SCALE IN FEET

Freese and Nichols, Inc.
Texas Registered Engineering Firm F-2144

STATE OF TEXAS
DUSTIN G. MORTENSEN
100000
LICENSED
PROFESSIONAL ENGINEER

Dustin G. Mortensen 4-23-2015

DESIGNED BY: JWE
DRAWN BY: CJG
CHECKED BY: DGM
FILE NAME: TX-NRC-XS-EXCAV01.dwg
DATE CHECKED: 4/22/2015

LABYRINTH WEIR EXCAVATION - SECTIONS

FLOODWATER RETARDING STRUCTURE NO. 6 REHABILITATION
PLUM CREEK WATERSHED
OF THE
PLUM CREEK WATER, TEXAS

NRCS
United States Department of Agriculture
Natural Resources Conservation Service

REVISIONS	DATE

DRAWING NO.
TX-EN-0650

SHEET
C-13

ACAD Rel: 19.1s (LMS Tech)
Filename: N:\WR\2012 Drawing\TX-NRC-XS-EXCAV01.dwg
Last Saved: 3/3/2015 10:06 AM Saved By: 02389

Plot Date: 4/22/2015 1:41 PM Plot By: 02389 Filename: N:\WR\2012 Drawing\TX-NRC-XS-EXCAV01.dwg

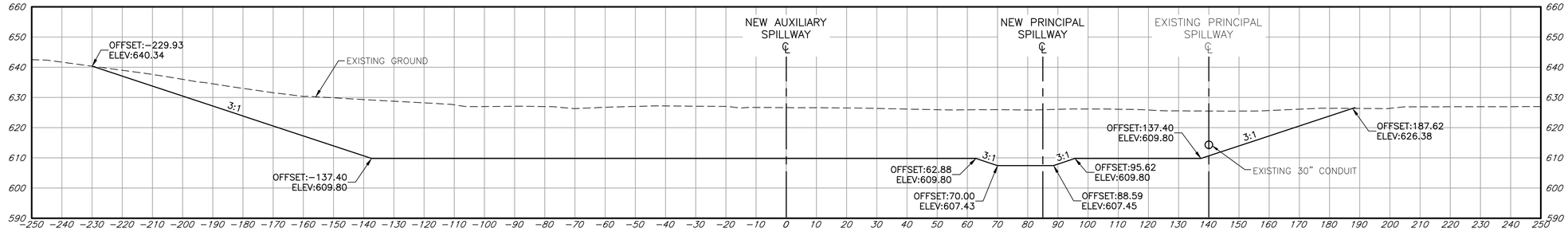

D C-12

AUXILIARY SPILLWAY EXCAVATION (STA 2+00)

0 20' 40'

SCALE IN FEET

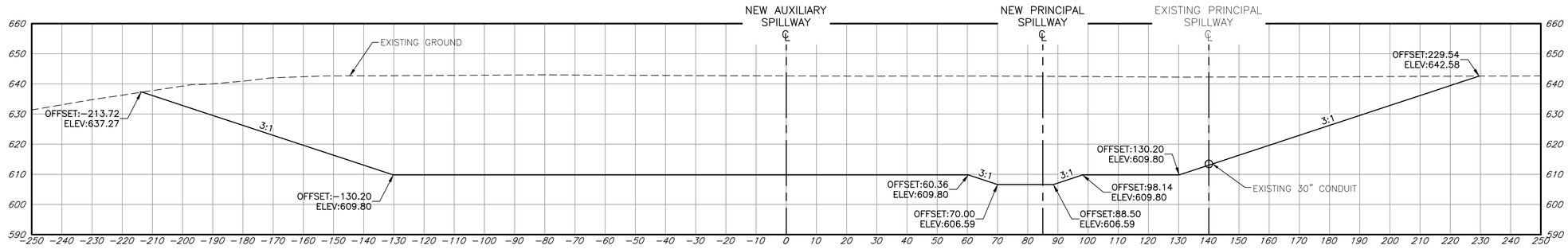

E C-12

AUXILIARY SPILLWAY EXCAVATION (STA 2+50)

0 20' 40'

SCALE IN FEET

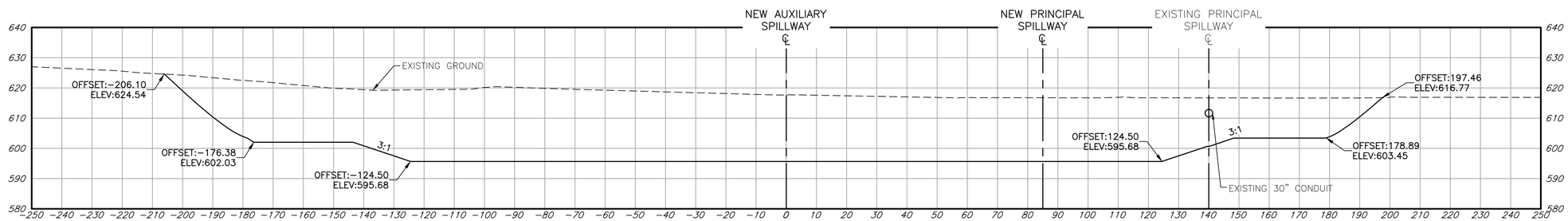

F C-12

AUXILIARY SPILLWAY EXCAVATION (STA 3+25)

0 20' 40'

SCALE IN FEET

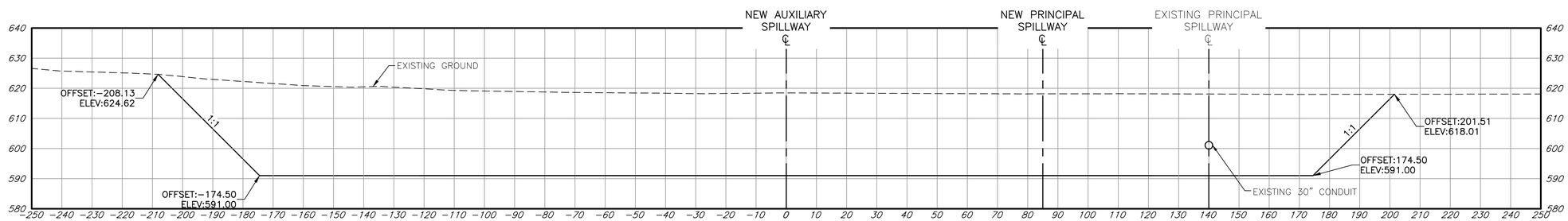

G C-12

AUXILIARY SPILLWAY EXCAVATION (STA 3+50)

0 20' 40'

SCALE IN FEET

Freese and Nichols, Inc.
Texas Registered Engineering Firm F-2144

STATE OF TEXAS
DUSTIN G. MORTENSEN
100000
LICENSED
PROFESSIONAL ENGINEER

4-23-2015

DESIGNED BY: JWE
DRAWN BY: CJG
CHECKED BY: DGM
FILE NAME: TX-NRC-XS-EXCAV01.dwg
DATE CHECKED: 4/22/2015

LABYRINTH WEIR EXCAVATION - SECTIONS

FLOODWATER RETARDING STRUCTURE NO. 6 REHABILITATION
PLUM CREEK WATERSHED
OF THE
PLUM CREEK WATER, TEXAS

NRCS
United States Department of Agriculture
Natural Resources Conservation Service

REVISIONS	DATE

DRAWING NO. TX-EN-0650

SHEET C-14

ACAD Rel: 19.1s (LMS Tech)
Filename: N:\WR\2012 Drawing\TX-NRC-XS-EXCAV01.dwg
Last Saved: 3/3/2015 10:06 AM Saved By: 02389

Plot Date: 4/22/2015 1:41 PM Plot By: 02389 Filename: N:\WR\2012 Drawing\TX-NRC-XS-EXCAV01.dwg

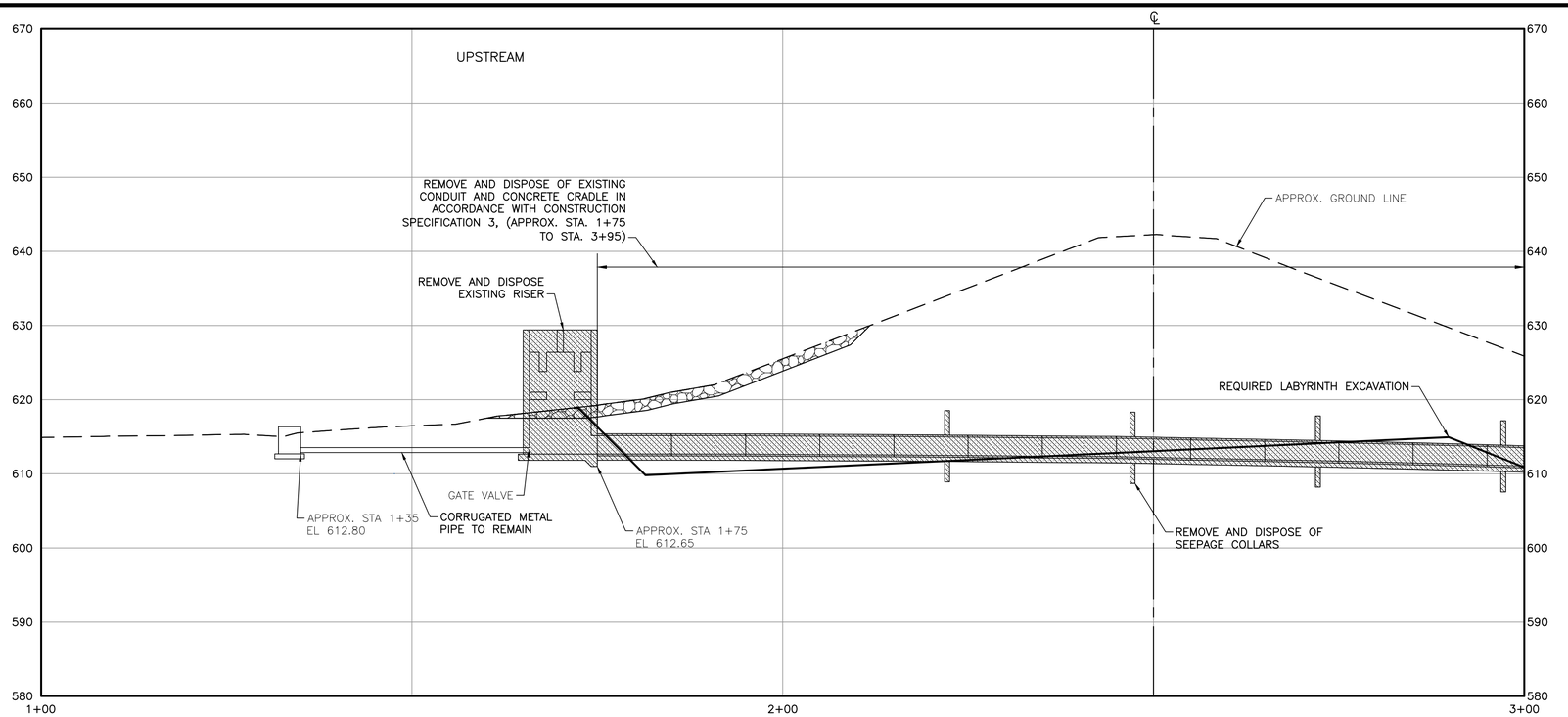

EXISTING PRINCIPAL SPILLWAY STA 1+00 TO 3+00

0 10' 20'

SCALE IN FEET

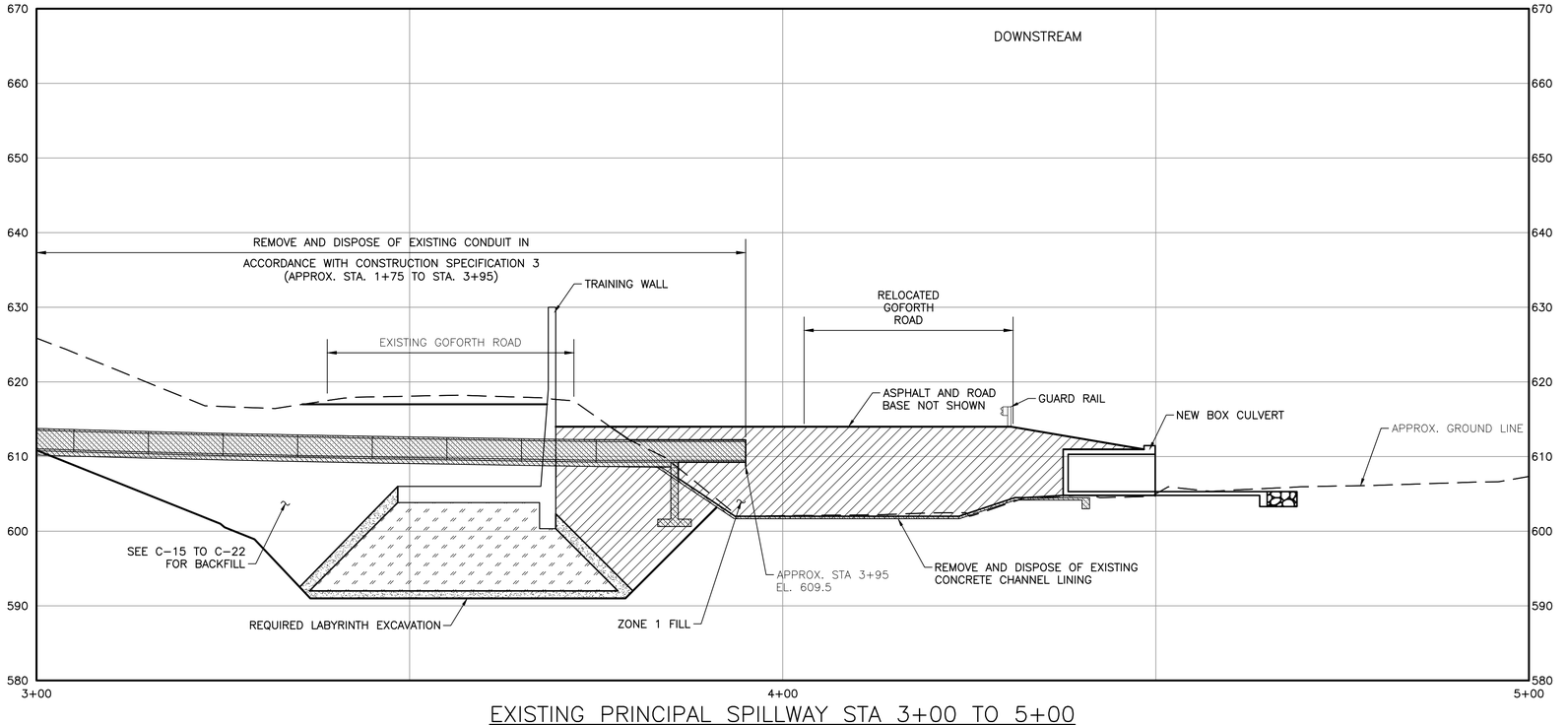

EXISTING PRINCIPAL SPILLWAY STA 3+00 TO 5+00

0 10' 20'

SCALE IN FEET

LEGEND

- ZONE 1
- ZONE 2
- ZONE 3
- ZONE 4
- FINE FILTER
- COARSE FILTER
- CONCRETE
- RIPRAP
- DEMOLITION

Freese and Nichols, Inc.
Texas Registered Engineering Firm F-2144

STATE OF TEXAS
DUSTIN G. MORTENSEN
100000
LICENSED
PROFESSIONAL ENGINEER

4-23-2015

DESIGNED BY: JWE
DRAWN BY: CJG
CHECKED BY: DGM
FILE NAME: TX-NRC-DT-MISC01.dwg
DATE CHECKED: 4/22/2015

EXISTING PRINCIPAL SPILLWAY MODIFICATIONS

FLOODWATER RETARDING STRUCTURE NO. 6 REHABILITATION
PLUM CREEK WATERSHED
OF THE
PLUM CREEK WATER, TEXAS

NRCS
United States Department of Agriculture
Natural Resources Conservation Service

REVISIONS DATE

DRAWING NO.
TX-EN-0650

SHEET
C-15

ACAD Rel: 19.1s (LMS Tech)
Filename: N:\WR\2012 Drawing\TX-NRC-DT-MISC01.dwg
Last Saved: 4/16/2015 9:31 AM Saved By: 02389

Plot Date: 4/22/2015 1:41 PM Plot By: 02389 Filename: N:\WR\2012 Drawing\TX-NRC-DT-MISC01.dwg

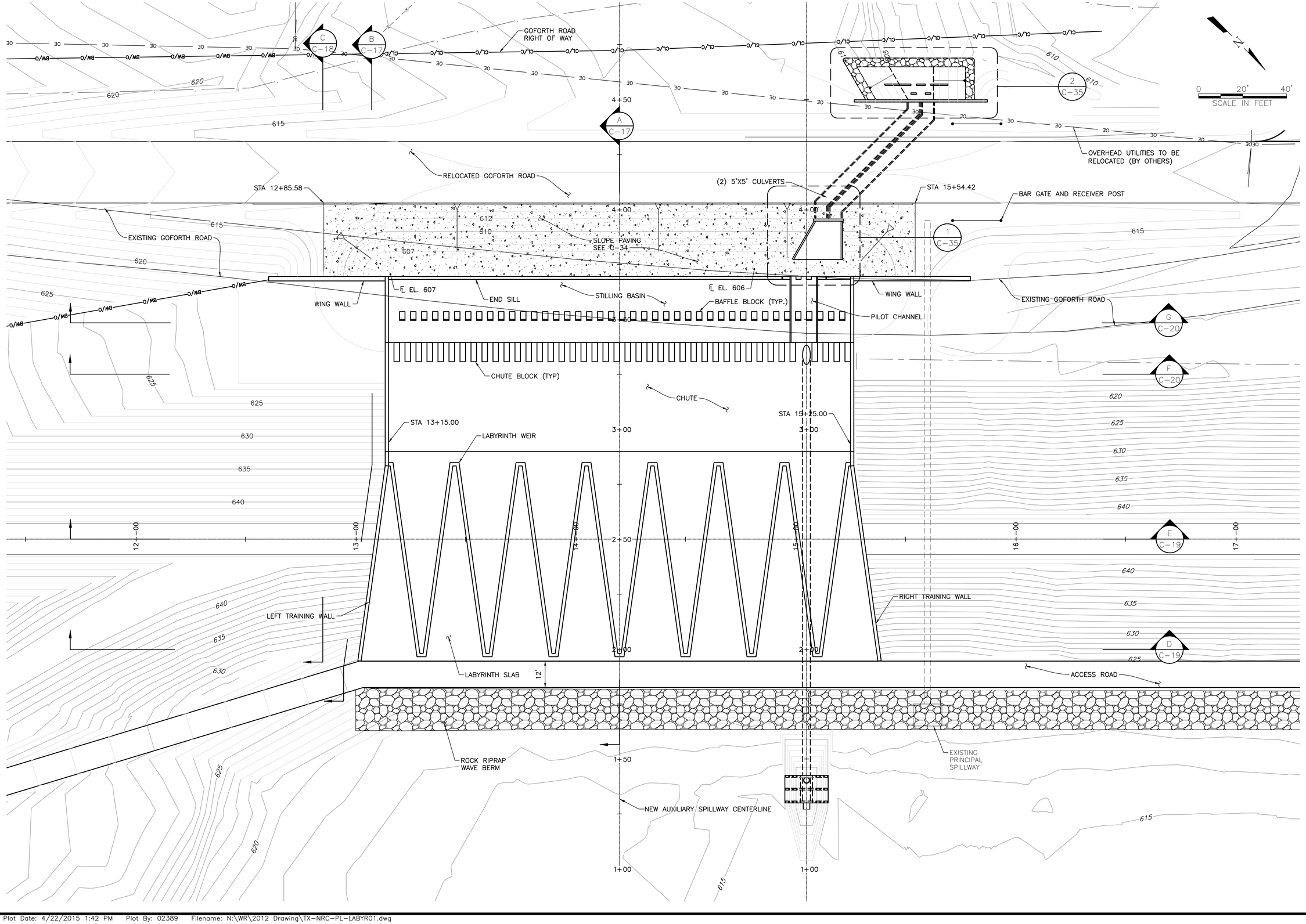

Freese and Nichols, Inc.
Texas Registered Engineering Firm F-2144

STATE OF TEXAS
DUSTIN G. MORTENSEN
100000
LICENSED
PROFESSIONAL ENGINEER
4-23-2015

DESIGNED BY: JWE
DRAWN BY: CJG
CHECKED BY: DGM
FILE NAME: TX-NRC-PL-LABYR01.dwg
DATE CHECKED: 4/22/2015

LABYRINTH WEIR - PLAN VIEW

FLOODWATER RETARDING STRUCTURE NO. 6 REHABILITATION
PLUM CREEK WATERSHED
OF THE
PLUM CREEK WATER, TEXAS

NRCS
United States Department of Agriculture
Natural Resources Conservation Service

REVISIONS | DATE

DRAWING NO.
TX-EN-0650

SHEET
C-16

ACAD Rel: 19.1s (LMS Tech)
Filename: N:\WR\2012 Drawing\TX-NRC-PL-LABYR01.dwg
Last Saved: 3/10/2015 2:51 PM Saved By: cjg

Plot Date: 4/22/2015 1:42 PM Plot By: 02389 Filename: N:\WR\2012 Drawing\TX-NRC-PL-LABYR01.dwg

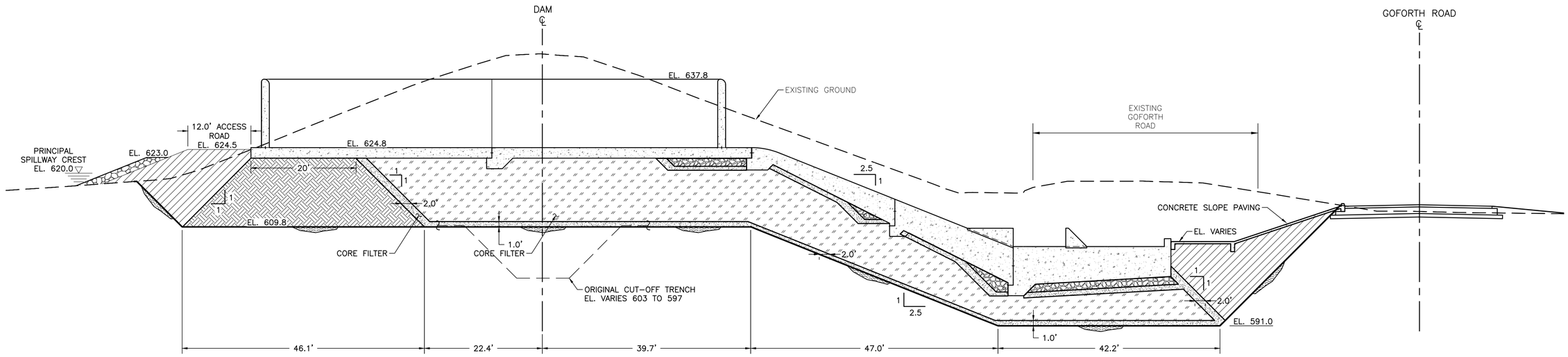

A C-16

AUXILIARY SPILLWAY

0 10' 20'

SCALE IN FEET

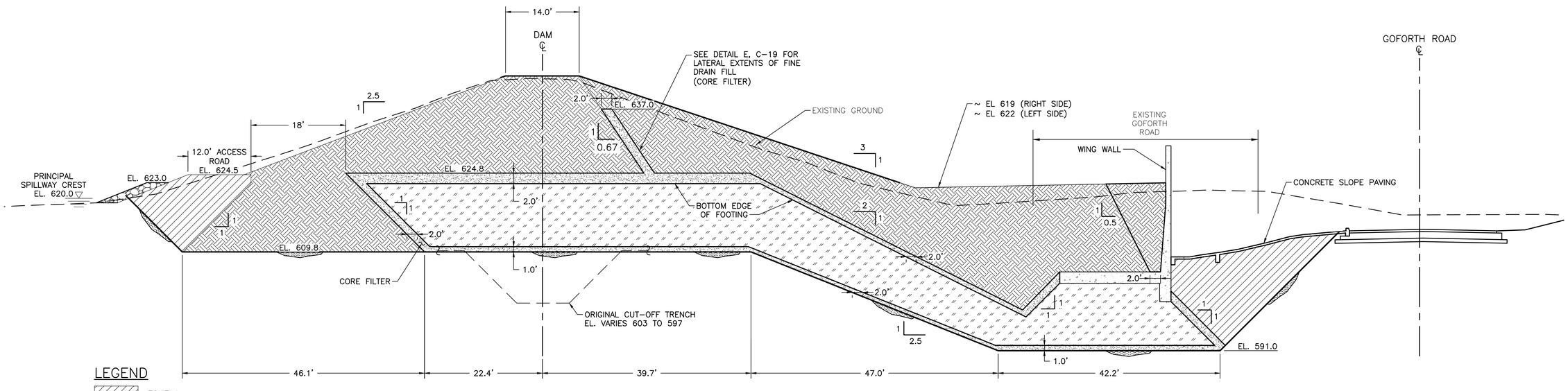

B C-16

AUXILIARY SPILLWAY FILL SECTION OUTSIDE EDGE OF FOOTING

0 10' 20'

SCALE IN FEET

SECTION CUT ALONG OUTSIDE EDGE OF FOOTING AND PROJECTED ON A PLANE PERPENDICULAR TO DAM CENTERLINE.

LEGEND

- ZONE 1
- ZONE 2
- ZONE 3
- ZONE 4
- FINE FILTER
- COARSE FILTER
- CONCRETE
- RIPRAP

NOTE:

1. ALL INCLINED FINE FILTER IS 2' WIDE MEASURED HORIZONTALLY.

Freese and Nichols, Inc.
Texas Registered Engineering Firm F-2144
STATE OF TEXAS
DUSTIN G. MORTENSEN
100000
LICENSED
PROFESSIONAL ENGINEER
4-23-2015

DESIGNED BY: JWE
DRAWN BY: CJG
CHECKED BY: DGM
FILE NAME: TX-NRC-XS-LABYR01.dwg
DATE CHECKED: 4/22/2015

LABYRINTH WEIR - SECTIONS

FLOODWATER RETARDING STRUCTURE NO. 6 REHABILITATION
PLUM CREEK WATERSHED
OF THE
PLUM CREEK WATER, TEXAS

NRCS
United States Department of Agriculture
Natural Resources Conservation Service

REVISIONS	DATE

DRAWING NO. TX-EN-0650

SHEET C-17

ACAD Rel: 19.1s (LMS Tech)
Filename: N:\WR\2012 Drawing\TX-NRC-XS-LABYR01.dwg
Last Saved: 4/22/2015 1:35 PM Saved By: 02389

Plot Date: 4/22/2015 1:42 PM Plot By: 02389 Filename: N:\WR\2012 Drawing\TX-NRC-XS-LABYR01.dwg

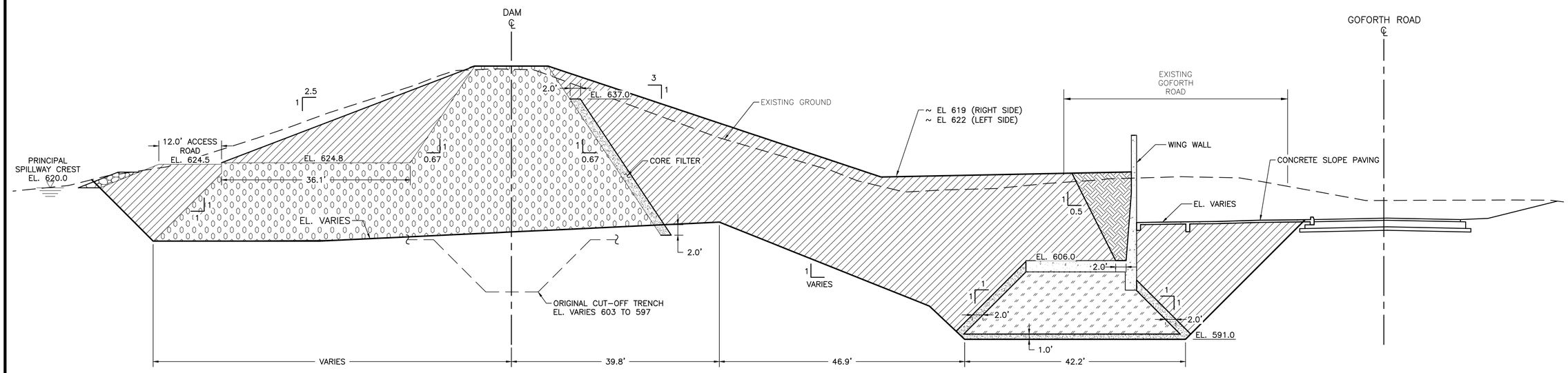

C
C-16

AUXILIARY SPILLWAY FILL SECTION

0 10' 20'
SCALE IN FEET

LEGEND

- ZONE 1
- ZONE 2
- ZONE 3
- ZONE 4
- FINE FILTER
- COARSE FILTER
- CONCRETE
- RIPRAP

NOTE:

1. ALL INCLINED FINE FILTER IS 2' WIDE MEASURED HORIZONTALLY.

Prepared by: Freese and Nichols, Inc.
Texas Registered Engineering Firm F-2144

STATE OF TEXAS
DUSTIN G. MORTENSEN
100000
LICENSED
PROFESSIONAL ENGINEER
4-23-2015

DESIGNED BY: JWE
DRAWN BY: CJG
CHECKED BY: DGM
FILE NAME: TX-NRC-XS-LABYR01.dwg
DATE CHECKED: 4/22/2015

LABYRINTH WEIR - SECTIONS

FLOODWATER RETARDING STRUCTURE NO. 6 REHABILITATION
PLUM CREEK WATERSHED
OF THE
PLUM CREEK WATER, TEXAS

NRCS
United States Department of Agriculture
Natural Resources Conservation Service

REVISIONS	DATE

DRAWING NO.
TX-EN-0650

SHEET
C-18

ACAD Rel: 19.1s (LMS Tech)
Filename: N:\WR\2012 Drawing\TX-NRC-XS-LABYR01.dwg
Last Saved: 4/22/2015 1:35 PM Saved By: 02389

Plot Date: 4/22/2015 1:42 PM Plot By: 02389 Filename: N:\WR\2012 Drawing\TX-NRC-XS-LABYR01.dwg

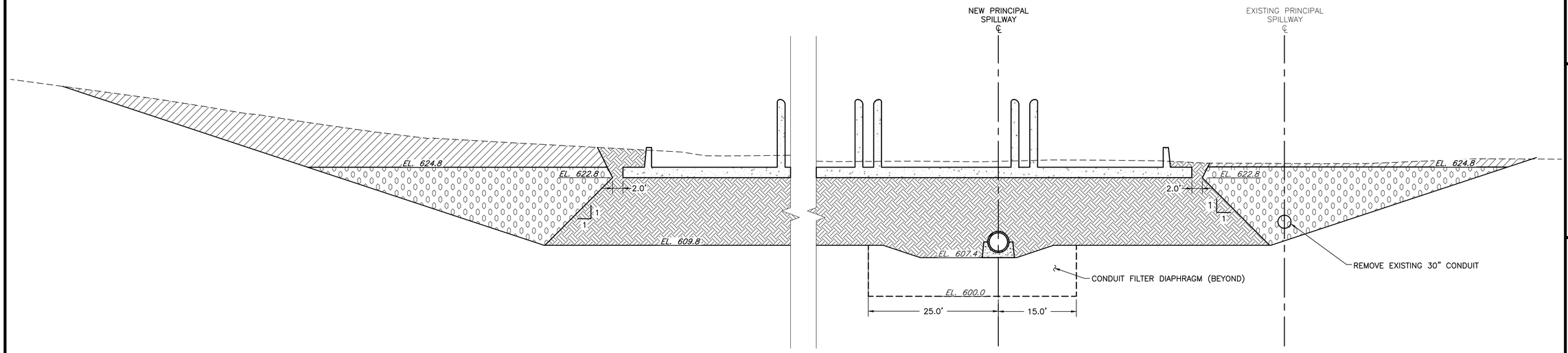

D
C-16

AUXILIARY SPILLWAY FILL (STA 2+00)

0 10' 20'
SCALE IN FEET

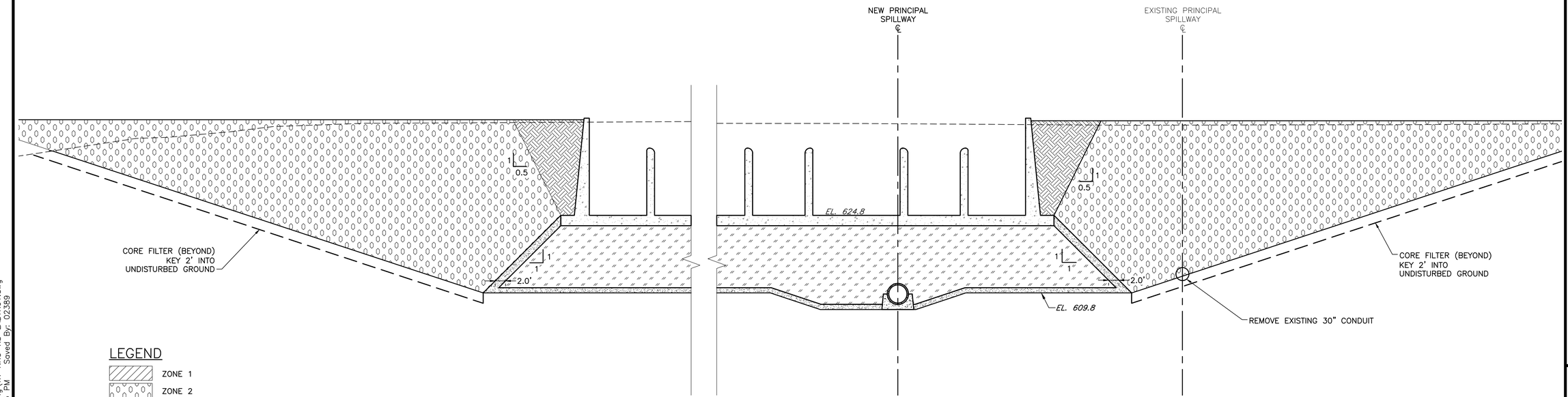

E
C-16

AUXILIARY SPILLWAY FILL (STA 2+50)

0 10' 20'
SCALE IN FEET

LEGEND

- ZONE 1
- ZONE 2
- ZONE 3
- ZONE 4
- FINE FILTER
- COARSE FILTER
- CONCRETE
- RIPRAP

Evans and Nichols, Inc.
Texas Registered Engineering Firm F-2144

STATE OF TEXAS
DUSTIN G. MORTENSEN
100000
LICENSED
PROFESSIONAL ENGINEER
4-23-2015

DESIGNED BY: JWE
DRAWN BY: CJG
CHECKED BY: DGM
FILE NAME: TX-NRC-XS-LABYR01.dwg
DATE CHECKED: 4/22/2015

LABYRINTH WEIR - SECTIONS STA. 2+00 TO 2+50

FLOODWATER RETARDING STRUCTURE NO. 6 REHABILITATION
PLUM CREEK WATERSHED
OF THE
PLUM CREEK WATER, TEXAS

United States Department of Agriculture
Natural Resources Conservation Service

REVISIONS DATE

DRAWING NO.
TX-EN-0650

SHEET
C-19

ACAD Rel: 19.1s (LMS Tech)
Filename: N:\WR\2012 Drawing\TX-NRC-XS-LABYR01.dwg
Last Saved: 4/22/2015 1:35 PM Saved By: 02389

Plot Date: 4/22/2015 1:42 PM Plot By: 02389 Filename: N:\WR\2012 Drawing\TX-NRC-XS-LABYR01.dwg

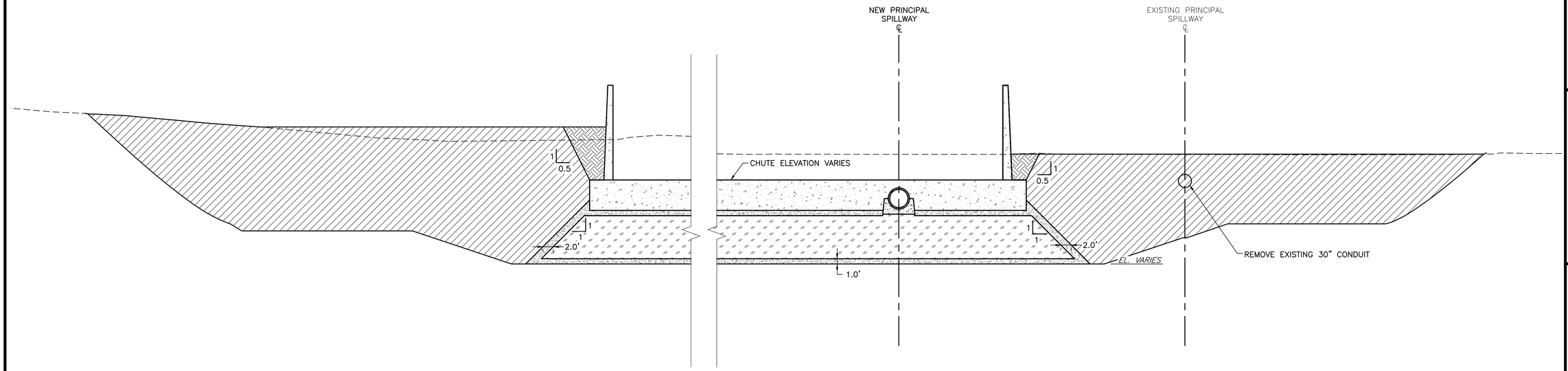

F
C-16

AUXILIARY SPILLWAY FILL (STA 3+25)

0 10' 20'
SCALE IN FEET

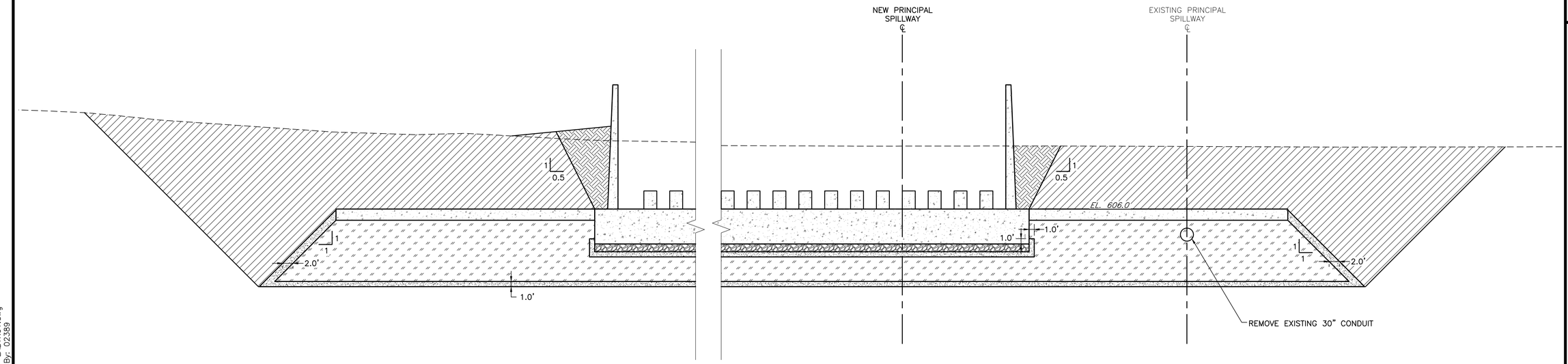

G
C-16

AUXILIARY SPILLWAY FILL (STA 3+50)

0 10' 20'
SCALE IN FEET

LEGEND

- ZONE 1
- ZONE 2
- ZONE 3
- ZONE 4
- FINE FILTER
- COARSE FILTER
- CONCRETE
- RIPRAP

Freese and Nichols, Inc.
Texas Registered Engineering Firm F-2144

STATE OF TEXAS
DUSTIN G. MORTENSEN
100000
LICENSED
PROFESSIONAL ENGINEER
4-23-2015

DESIGNED BY: JWE
DRAWN BY: CJG
CHECKED BY: DGM
FILE NAME: TX-NRC-XS-LABYR01.dwg
DATE CHECKED: 4/22/2015

LABYRINTH WEIR - SECTIONS STA. 3+25 TO 3+50

FLOODWATER RETARDING STRUCTURE NO. 6 REHABILITATION
PLUM CREEK WATERSHED
OF THE
PLUM CREEK WATER, TEXAS

NRCS
United States Department of Agriculture
Natural Resources Conservation Service

REVISIONS DATE

DRAWING NO.
TX-EN-0650

SHEET
C-20

ACAD Rel: 19.1s (LMS Tech)
Filename: N:\WR\2012 Drawing\TX-NRC-XS-LABYR01.dwg
Last Saved: 4/22/2015 1:35 PM Saved By: 02389

Plot Date: 4/22/2015 1:42 PM Plot By: 02389 Filename: N:\WR\2012 Drawing\TX-NRC-XS-LABYR01.dwg

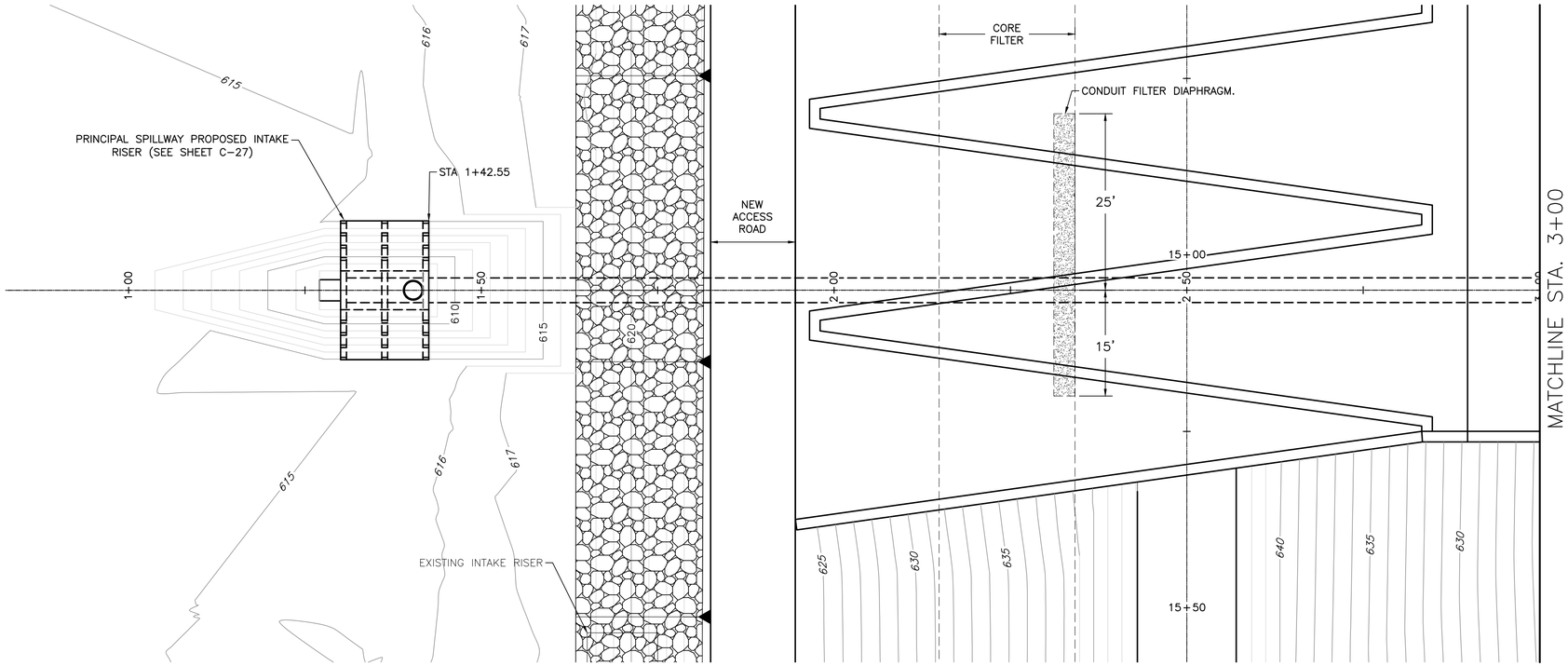

PRINCIPAL SPILLWAY – PLAN VIEW

0 10' 20'

SCALE IN FEET

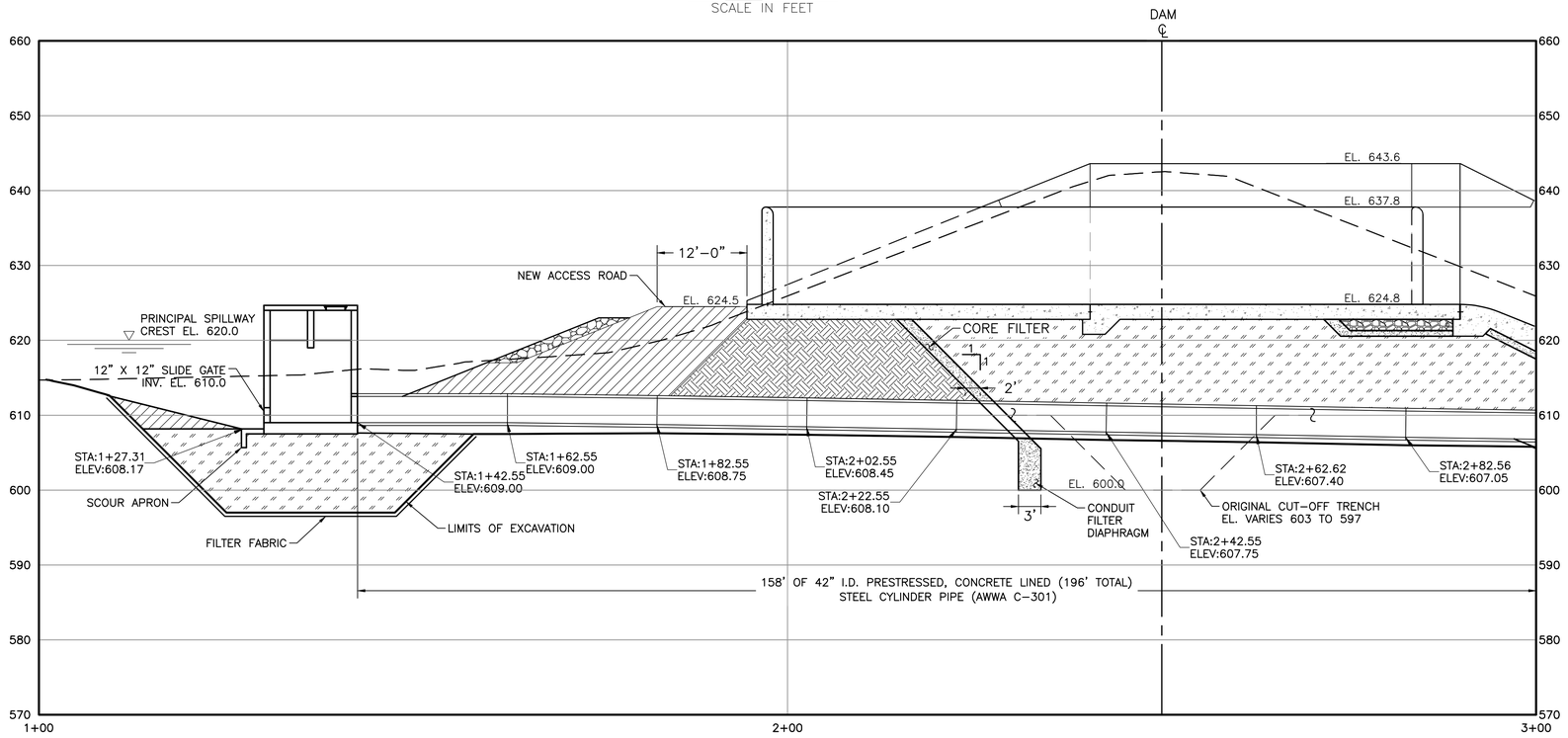

PRINCIPAL SPILLWAY – PROFILE VIEW

0 10' 20'

SCALE IN FEET

LEGEND

- ZONE 1
- ZONE 2
- ZONE 3
- ZONE 4
- FINE FILTER
- COARSE FILTER
- CONCRETE
- RIPRAP

Freese and Nichols, Inc.
Texas Registered Engineering Firm F-2144
STATE OF TEXAS
DUSTIN G. MORTENSEN
100000
LICENSED
PROFESSIONAL ENGINEER
4-23-2015

DESIGNED BY:	JWE
DRAWN BY:	CJG
CHECKED BY:	DGM
FILE NAME:	TX-NRC-PP-PS.dwg
DATE CHECKED:	4/22/2015

NEW PRINCIPAL SPILLWAY – PLAN AND PROFILE

FLOODWATER RETARDING STRUCTURE NO. 6 REHABILITATION
PLUM CREEK WATERSHED
OF THE
PLUM CREEK WATER, TEXAS

NRCS
United States Department of Agriculture
Natural Resources Conservation Service

REVISIONS	DATE

DRAWING NO.
TX-EN-0650

SHEET
C-21

ACAD Rel: 19.1s (LMS Tech)
Filename: N:\WR\2012 Drawing\TX-NRC-PP-PS.dwg
Last Saved: 4/16/2015 9:01 AM Saved By: 02389

Plot Date: 4/22/2015 1:43 PM Plot By: 02389 Filename: N:\WR\2012 Drawing\TX-NRC-PP-PS.dwg

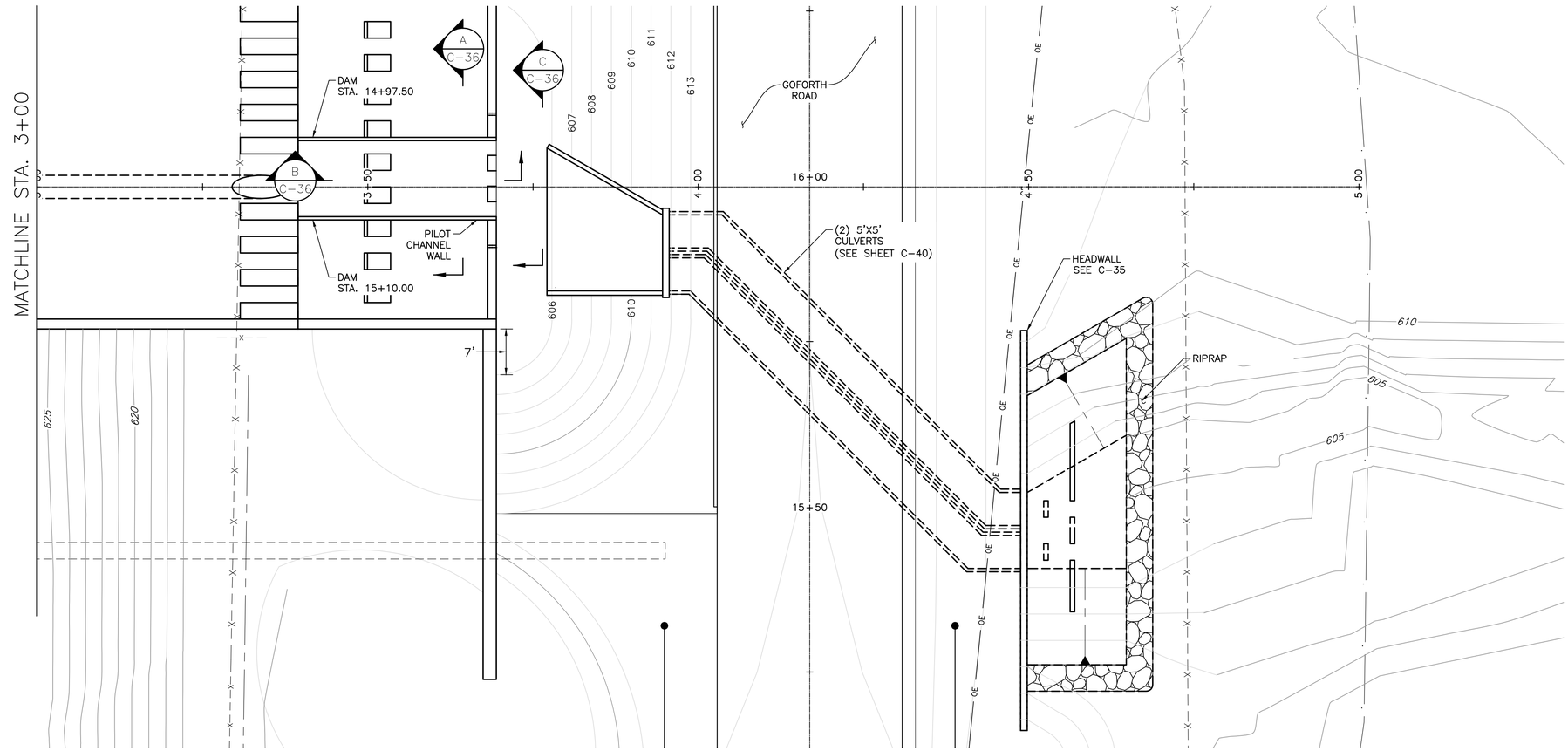

PRINCIPAL SPILLWAY – PLAN VIEW

0 10' 20'

SCALE IN FEET

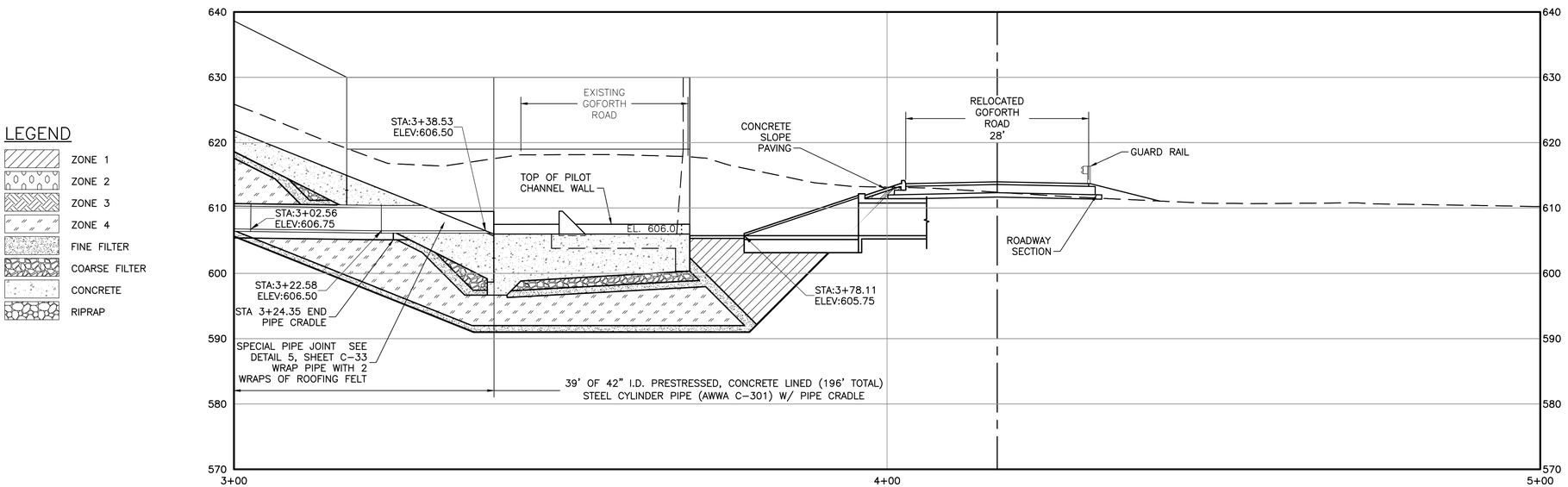

PRINCIPAL SPILLWAY – PROFILE VIEW

0 10' 20'

SCALE IN FEET

Freese and Nichols, Inc.
Texas Registered Engineering Firm F-2144
STATE OF TEXAS
DUSTIN G. MORTENSEN
100000
LICENSED
PROFESSIONAL ENGINEER
4-23-2015

DESIGNED BY: JWE
DRAWN BY: CJG
CHECKED BY: DGM
FILE NAME: TX-NRC-PP-PS.dwg
DATE CHECKED: 4/22/2015

NEW PRINCIPAL SPILLWAY – PLAN AND PROFILE

FLOODWATER RETARDING STRUCTURE NO. 6 REHABILITATION
PLUM CREEK WATERSHED
OF THE
PLUM CREEK WATER, TEXAS

United States Department of Agriculture
Natural Resources Conservation Service

REVISIONS DATE

DRAWING NO.
TX-EN-0650

SHEET
C-22

ACAD Rel: 19.1s (LMS Tech)
Filename: N:\WR\2012 Drawing\TX-NRC-PP-PS.dwg
Last Saved: 4/16/2015 9:01 AM Saved By: 02389

Plot Date: 4/22/2015 1:43 PM Plot By: 02389 Filename: N:\WR\2012 Drawing\TX-NRC-PP-PS.dwg

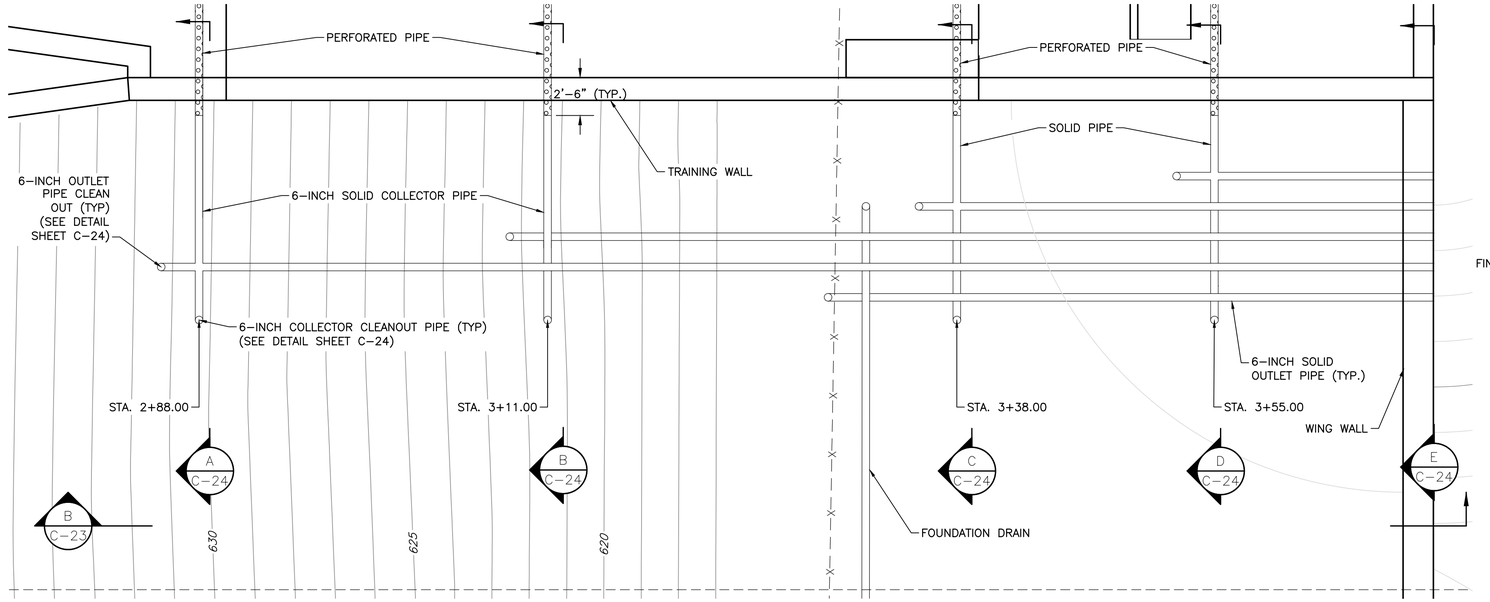

1 C-11 AUXILIARY SPILLWAY DRAINAGE PARTIAL PLAN

0 5' 10'
SCALE IN FEET

NOTE: UNDERDRAIN PIPING SYMMETRICAL ABOUT CENTERLINE

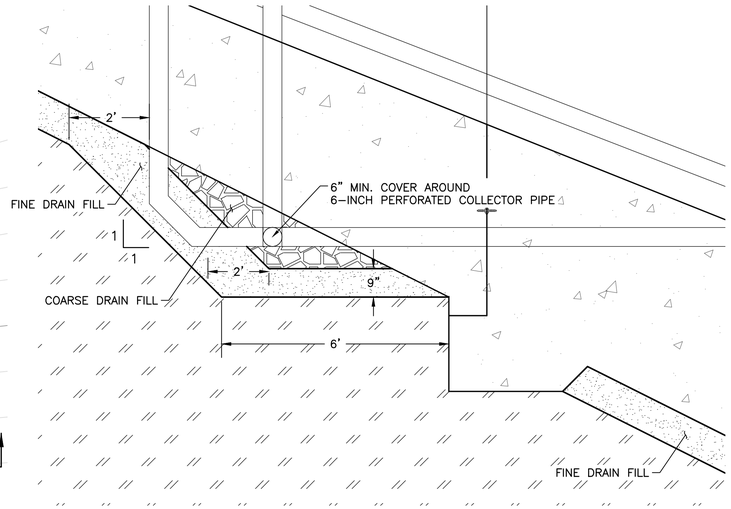

A C-23 AUXILIARY SPILLWAY PARTIAL DRAINAGE ELEVATION

0 2' 4'
SCALE IN FEET

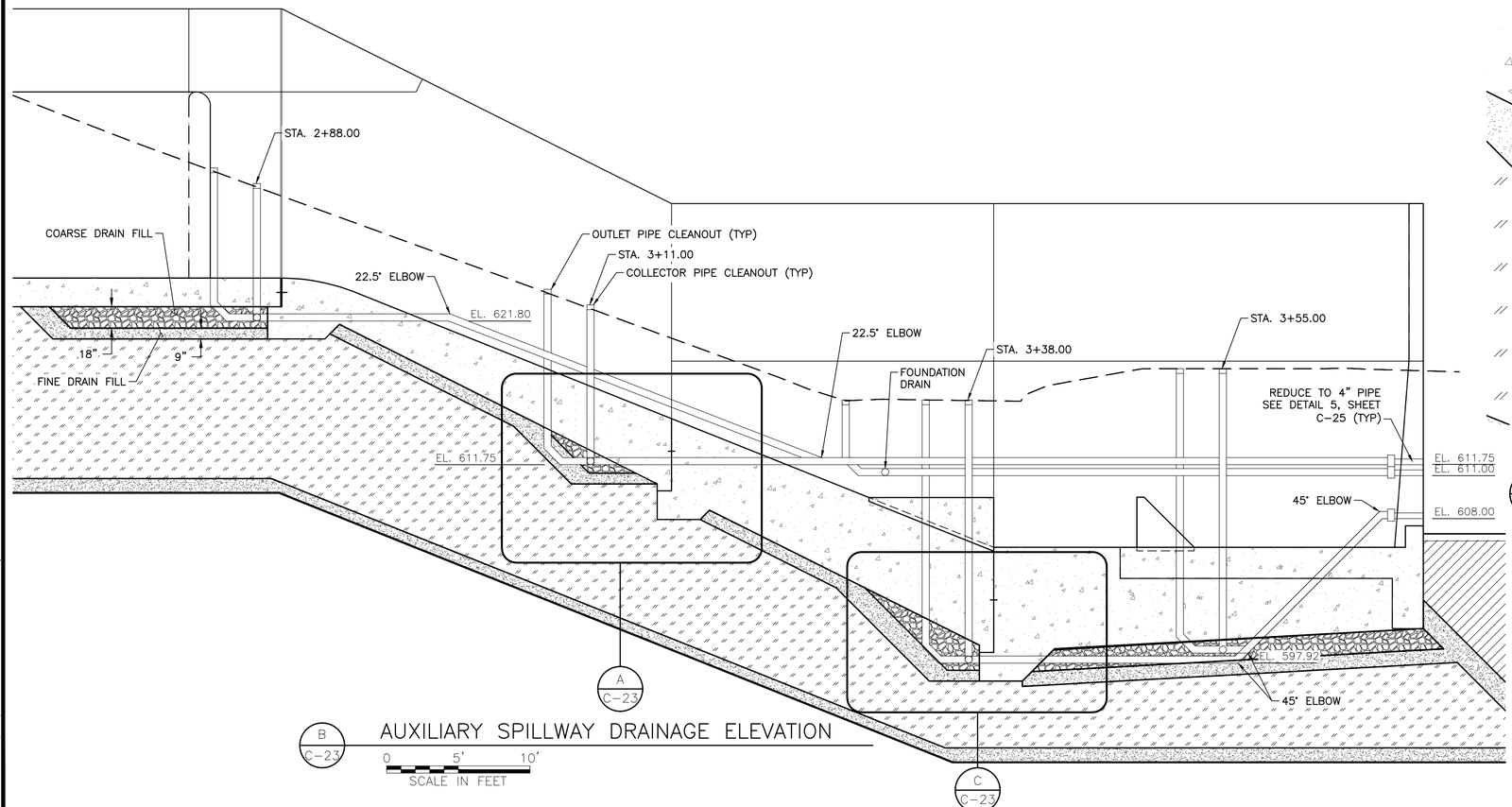

B C-23 AUXILIARY SPILLWAY DRAINAGE ELEVATION

0 5' 10'
SCALE IN FEET

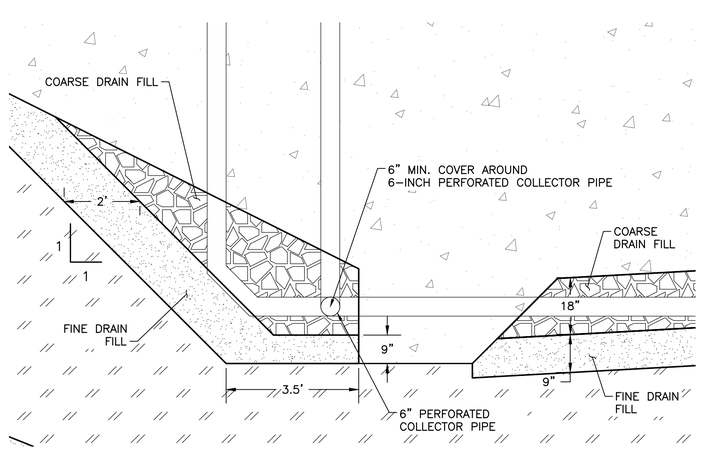

C C-23 AUXILIARY SPILLWAY PARTIAL DRAINAGE ELEVATION

0 2' 4'
SCALE IN FEET

LEGEND

- ZONE 1
- ZONE 2
- ZONE 3
- ZONE 4
- FINE FILTER
- COARSE FILTER
- CONCRETE
- RIPRAP

Freese and Nichols, Inc.
Texas Registered Engineering Firm F-2144

STATE OF TEXAS
DUSTIN G. MORTENSEN
100000
LICENSED
PROFESSIONAL ENGINEER
4-23-2015

DESIGNED BY:	JWE
DRAWN BY:	CJG
CHECKED BY:	DGM
FILE NAME:	TX-NRC-DT-LABYR01.dwg
DATE CHECKED:	4/22/2015

LABYRINTH WEIR UNDERDRAIN – PLAN AND SECTION

FLOODWATER RETARDING STRUCTURE NO. 6 REHABILITATION
PLUM CREEK WATERSHED
OF THE
PLUM CREEK WATER, TEXAS

NRCS
United States Department of Agriculture
Natural Resources Conservation Service

REVISIONS	DATE

DRAWING NO.
TX-EN-0650

SHEET
C-23

ACAD Rel: 19.1s (LMS Tech)
Filename: N:\WR\2012 Drawing\TX-NRC-DT-LABYR01.dwg
Last Saved: 4/10/2015 1:13 PM Saved By: 02389

Plot Date: 4/22/2015 1:44 PM Plot By: 02389 Filename: N:\WR\2012 Drawing\TX-NRC-DT-LABYR01.dwg

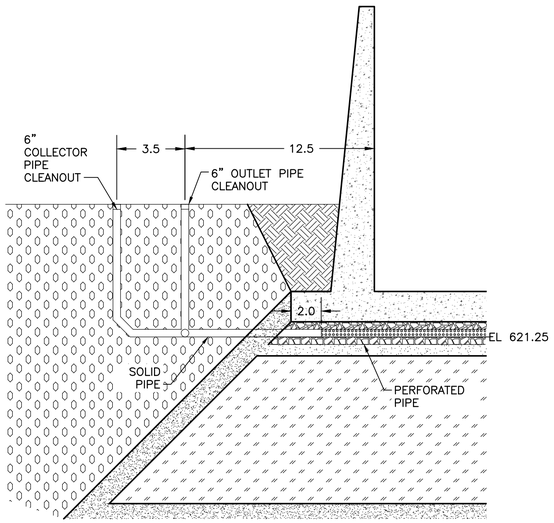

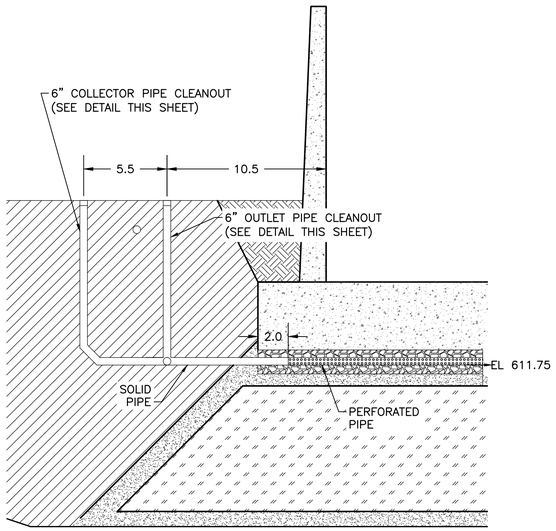

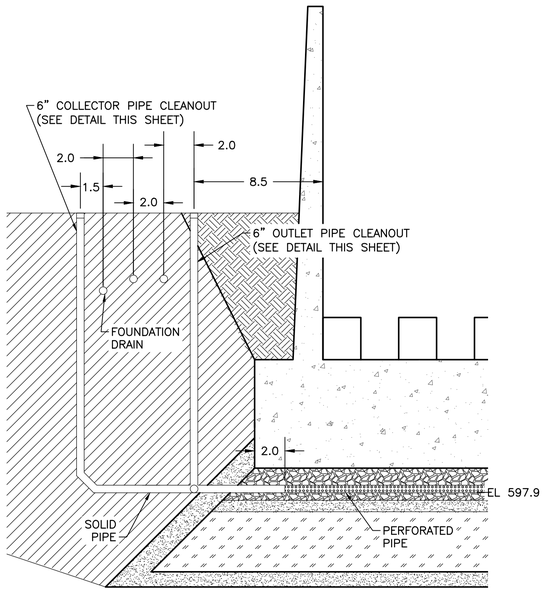

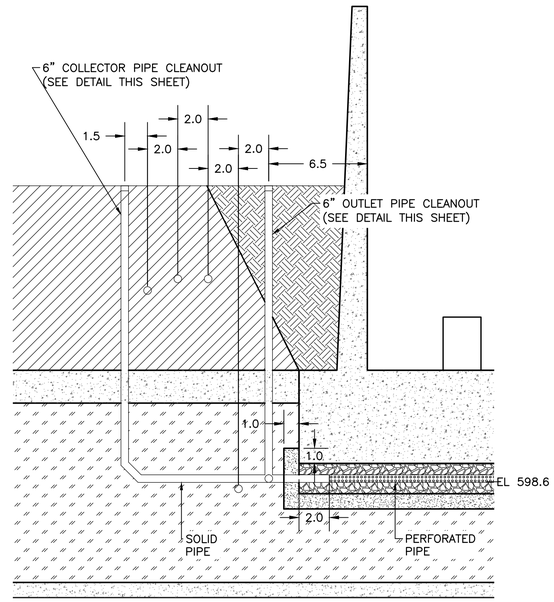

A C-23 UNDER DRAIN SECTION STA. 2+88
N.T.S.

B C-23 UNDER DRAIN SECTION STA. 3+11
N.T.S.

C C-23 UNDER DRAIN SECTION STA. 3+38
N.T.S.

D C-23 UNDER DRAIN SECTION STA. 3+55
N.T.S.

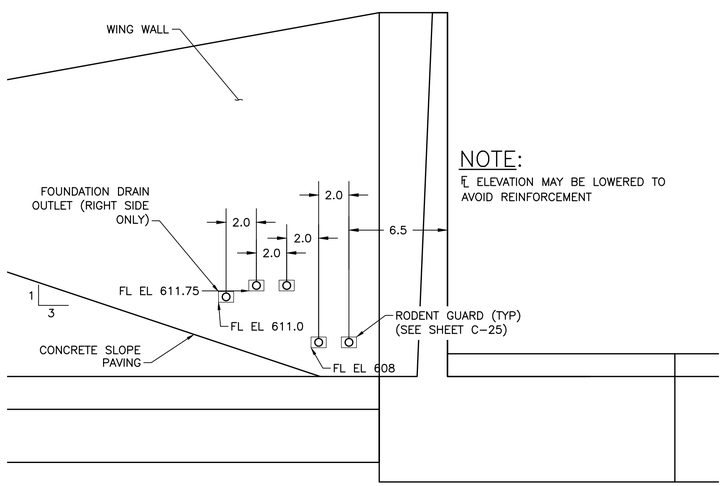

NOTE:
℄ ELEVATION MAY BE LOWERED TO AVOID REINFORCEMENT

E C-23 DRAIN OUTFALL
N.T.S.

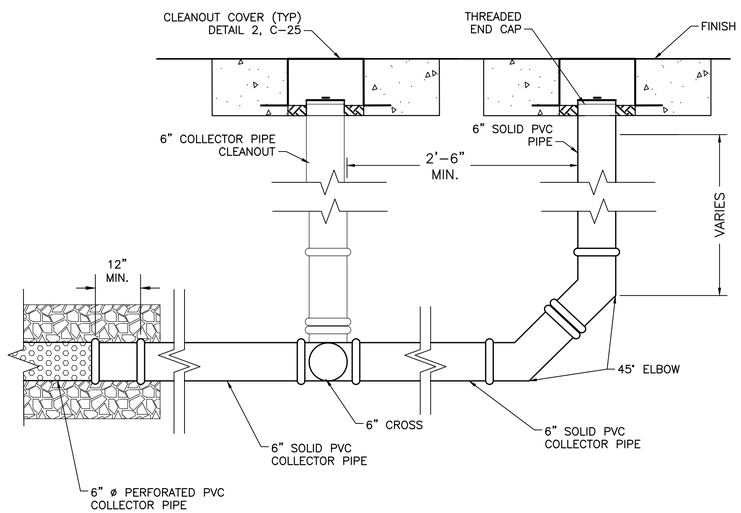

1 C-24 6" COLLECTOR PIPE CLEANOUT DETAIL
N.T.S.

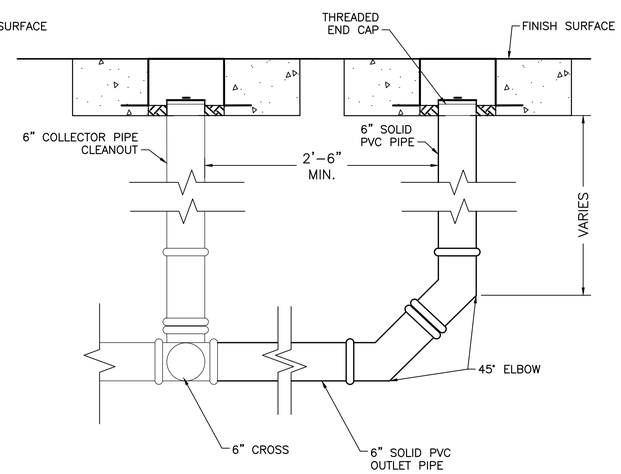

2 C-24 6" OUTLET PIPE CLEANOUT DETAIL
N.T.S.

Freese and Nichols, Inc.
Texas Registered Engineering Firm F-2144
STATE OF TEXAS
DUSTIN G. MORTENSEN
100000
LICENSED
PROFESSIONAL ENGINEER
4-23-2015

DESIGNED BY:	JWE
DRAWN BY:	CJG
CHECKED BY:	DGM
FILE NAME:	TX-NRC-DT-LABYR01.dwg
DATE CHECKED:	4/22/2015

LABYRINTH WEIR - UNDERDRAIN DETAILS

FLOODWATER RETARDING STRUCTURE NO. 6 REHABILITATION
PLUM CREEK WATERSHED
OF THE
PLUM CREEK WATER, TEXAS

NRCS
United States Department of Agriculture
Natural Resources Conservation Service

REVISIONS	DATE

DRAWING NO.
TX-EN-0650

SHEET
C-24

ACAD Rel: 19.1s (LMS Tech)
Filename: N:\WR\2012 Drawing\TX-NRC-DT-LABYR01.dwg
Last Saved: 4/10/2015 1:13 PM Saved By: 02389

Plot Date: 4/22/2015 1:44 PM Plot By: 02389 Filename: N:\WR\2012 Drawing\TX-NRC-DT-LABYR01.dwg

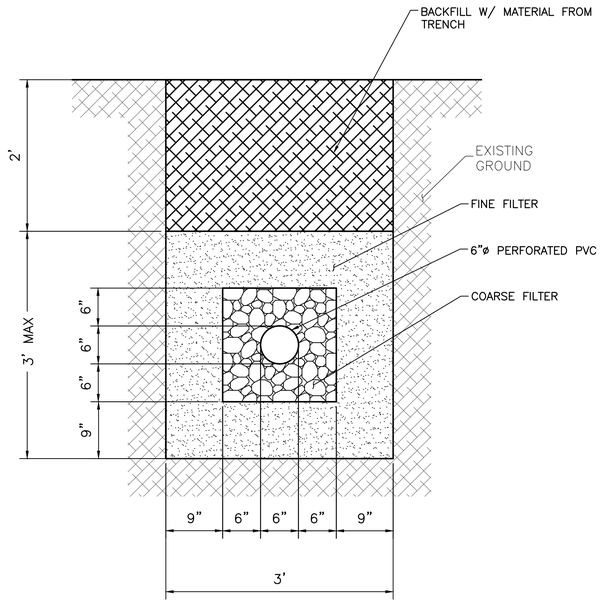

1 C-11 TYPICAL FOUNDATION DRAIN DETAIL

0 1' 2'

SCALE IN FEET

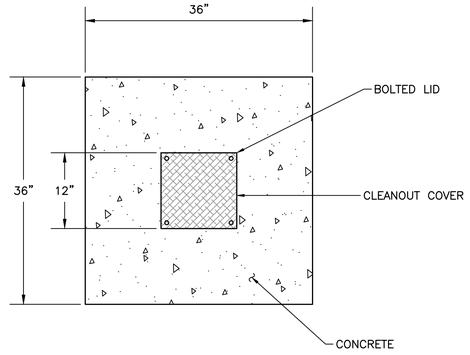

PLAN VIEW

2 C-24 CLEANOUT COVER

0 1' 2'

SCALE IN FEET

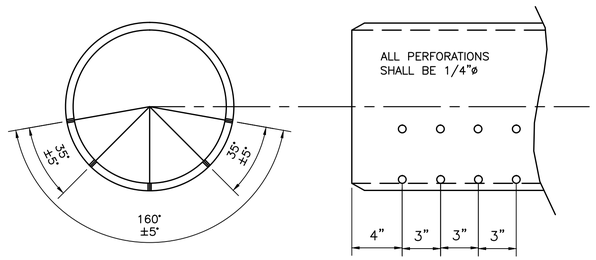

ALL P.V.C. PLASTIC AND FITTINGS SHALL MEET THE REQUIREMENTS OF MATERIAL SPECIFICATION 547 AND CONSTRUCTION SPECIFICATION 45.

3 — PERFORATED PIPE DETAIL

0 .5' 1'

SCALE IN FEET

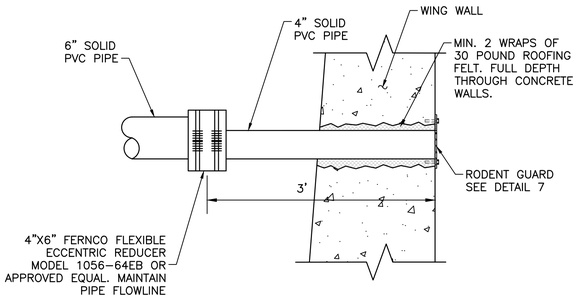

5 C-23 DRAIN PENETRATION THROUGH WALL

0 1' 2'

SCALE IN FEET

FOUNDATION AND LABYRINTH UNDERDRAIN BILL OF MATERIALS	
QUANTITY	MATERIAL
44	6-Inch Diameter 45 Degree Elbow
4	6-Inch Diameter 22.5 Degree Elbow
9	6-Inch Diameter Cross
22	6-Inch Diameter Removable Cap
4	6-Inch Diameter Y
1	6-Inch Non-Removable Cap
9	6-inch x 4-Inch Eccentric Reducer
1,586	6-Inch Diameter Perforated Pipe
830	6-Inch Diameter Solid Pipe
27	4-Inch Diameter Solid Pipe
22	Cleanout Lids

RODENT GUARD NOTES:

1. RODENT GUARDS SHALL BE GALVANIZED AFTER FABRICATION SEE MATERIAL SPECIFICATION 581 AND CONSTRUCTION SPECIFICATION 81. RODENT GUARDS TO BE PLACED OVER ALL DRAIN PIPE OUTFALLS.
2. NON-SHRINK GROUT TO BE APPLIED IF AND AS DIRECTED BY THE CONTRACTING OFFICER. BETWEEN THE CONCRETE WALL AND RODENT GUARD.

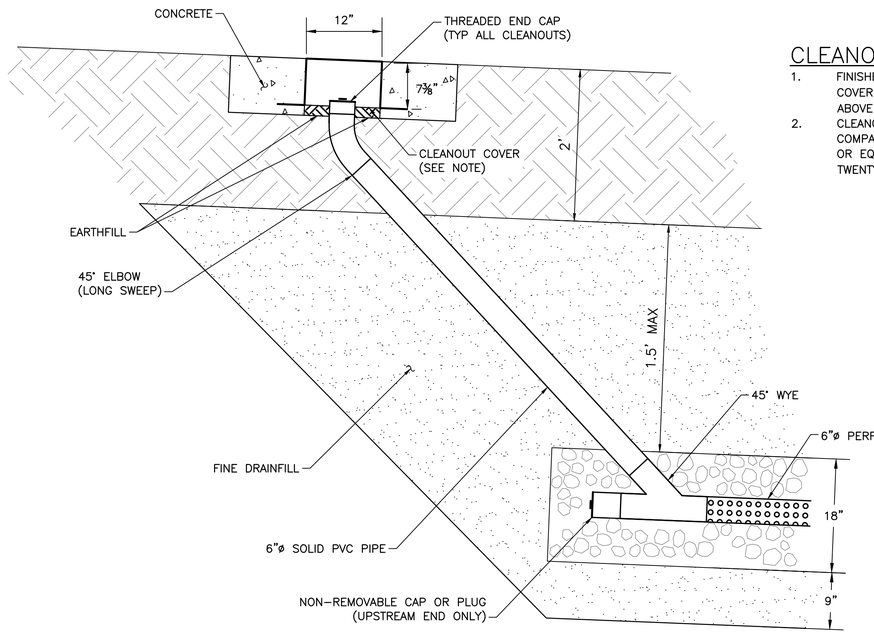

4 C-11 TOE DRAIN CLEANOUT DETAIL

0 1' 2'

SCALE IN FEET

CLEANOUT NOTES:

1. FINISHED GRADE OF CONCRETE AND CLEANOUT COVER SHALL EXTEND NO MORE THAN 0.1' ABOVE THE FINISH GRADE OF EMBANKMENT.
2. CLEANOUT COVERS SHALL BE NEENAH FOUNDRY COMPANY R-1978-B SQUARE WITH BOLTED LID OR EQUIVALENT AS APPROVED BY THE ENGINEER. TWENTY TWO (22) REQUIRED.

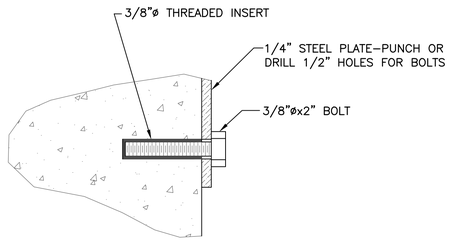

6 C-25 BOLT SECTION

N.T.S

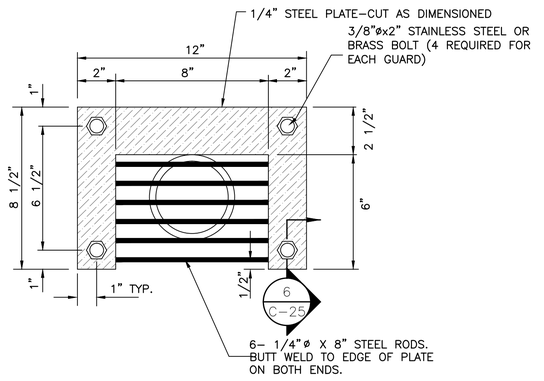

7 C-25 RODENT GUARD (9 REQUIRED)

0 1" 2" 4" 8"

3"=1'-0"

Freese and Nichols, Inc.
Texas Registered Engineering Firm F-2144

STATE OF TEXAS
DUSTIN G. MORTENSEN
100000
LICENSED
PROFESSIONAL ENGINEER

Dustin Mortensen 4-23-2015

DESIGNED BY: JWE
DRAWN BY: CJG
CHECKED BY: DGM
FILE NAME: TX-NRC-DT-MISC14.dwg
DATE CHECKED: 4/23/2015

DRAIN PIPE DETAILS

FLOODWATER RETARDING STRUCTURE NO. 6 REHABILITATION
PLUM CREEK WATERSHED
OF THE
PLUM CREEK WATER, TEXAS

NRCS
United States Department of Agriculture
Natural Resources Conservation Service

REVISIONS	DATE

DRAWING NO.
TX-EN-0650

SHEET
C-25

ACAD Rel: 19.1s (LMS Tech)
Filename: N:\WR\2012 Drawing\TX-NRC-DT-MISC14.dwg
Last Saved: 4/10/2015 1:17 PM Saved By: 02389

Plot Date: 4/23/2015 8:20 AM Plot By: cjg Filename: N:\WR\2012 Drawing\TX-NRC-DT-MISC14.dwg

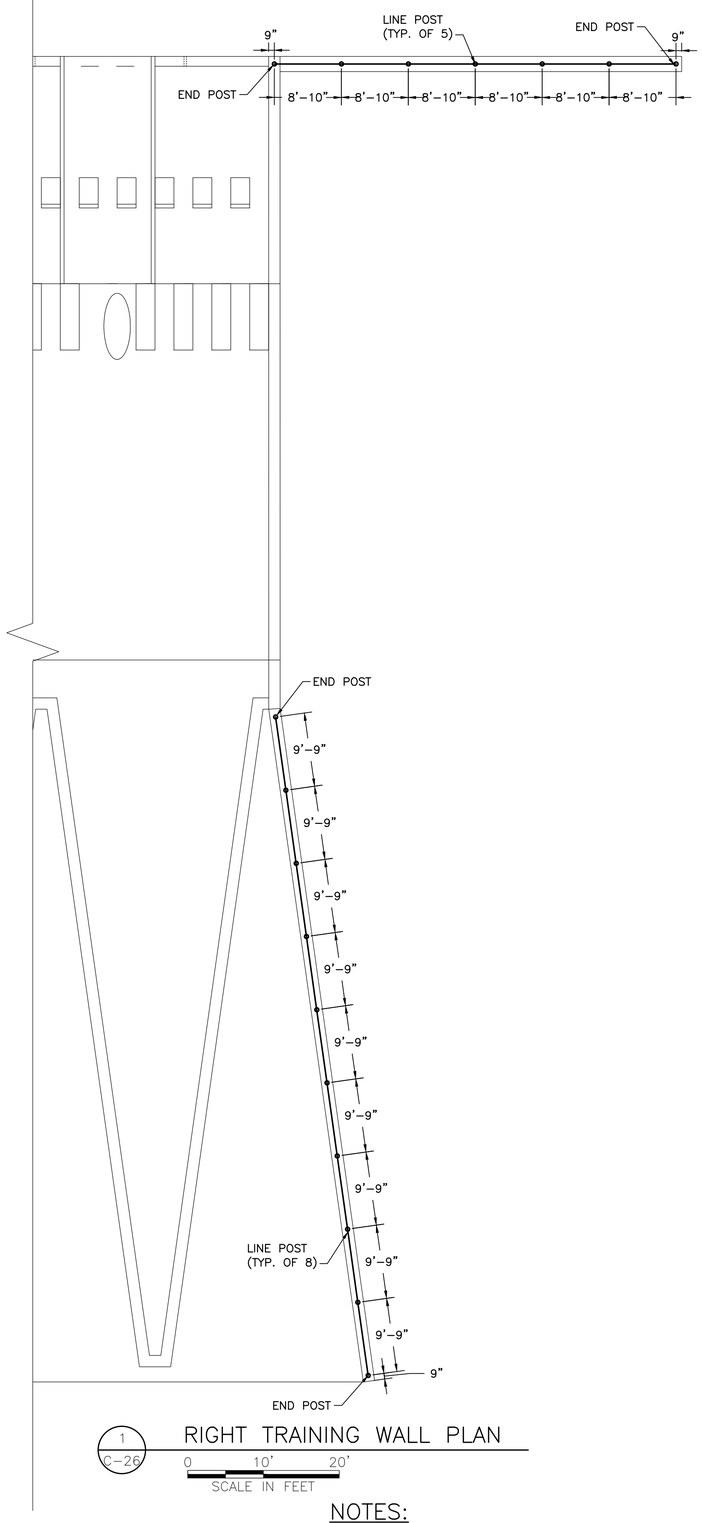

1 C–26

RIGHT TRAINING WALL PLAN

0 10' 20'

SCALE IN FEET

NOTES:

TRAINING WALL FENCING SYMMETRICAL ABOUT SPILLWAY CENTERLINE

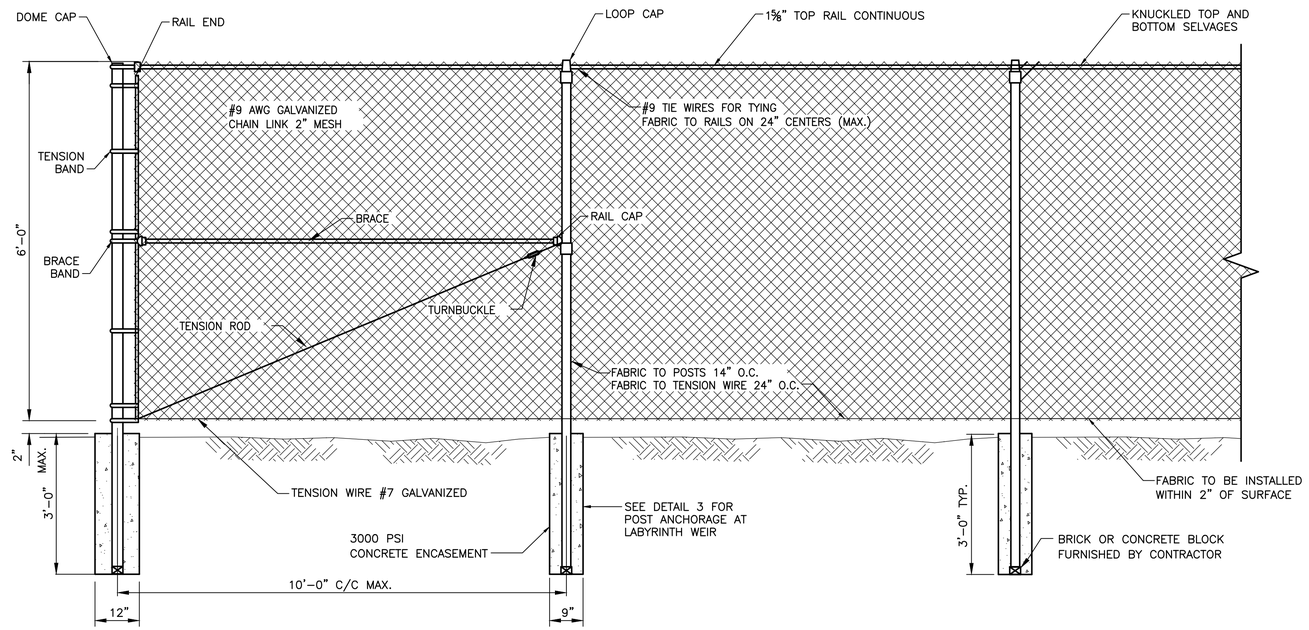

END POST
(OR CORNER)
2–7/8" O.D. STD PIPE

LINE POST
2–3/8" O.D. STD PIPE

TYPICAL POST EMBEDMENT

2 N.T.S

ELEVATION CHAIN LINK FENCE

NOTES:

1. ALL CHAIN LINK FENCES METAL PARTS SHALL BE HOT DIP GALVANIZED AFTER FABRICATION.
2. FENCES SHALL BE FURNISHED COMPLETE WITH ALL NECESSARY FITTINGS AND HARDWARE.
3. POST SHALL BE ROLLED OR EXTRUDED SECTIONS OR TUBING OF STEEL CAPABLE OF WITHSTANDING A LATERAL FORCE OF 100 POUNDS APPLIED AT THE TOP. ALL HOLLOW POST SHALL BE CAPPED.
4. STANDARD PIPE SIZES INDICATED ARE NOMINAL DIAMETER, SCHEDULE 40, PER AMERICAN STANDARDS ASSOCIATION (ASA) B 36.10

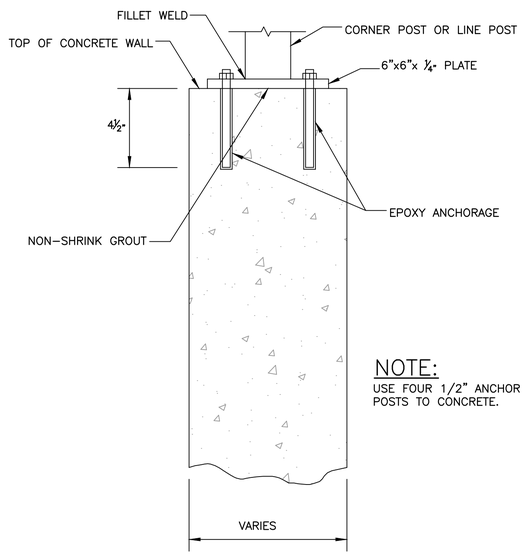

NOTE:

USE FOUR 1/2" ANCHOR BOLTS, TO SECURE POSTS TO CONCRETE.

3 C–26

LABYRINTH WEIR
FENCE POST ANCHORAGE DETAIL

NTS 0 1" 2" 4" 8"

3"=1'–0"

LABYRINTH WEIR SAFETY FENCE
BILL OF MATERIALS

QUANTITY	MATERIAL
48'-0"	2 7/8" O.D. TUBULAR STEEL PIPE FOR END POSTS (CUT INTO 8, 6' POST)
156'-0"	2 3/8" O.D. TUBULAR STEEL PIPE FOR LINE POSTS (CUT INTO 26, 6' POST)
281'-6"	1 5/8" O.D. TUBULAR STEEL PIPE FOR RAILS (CUT AS REQUIRED)
281'-6"	6'-0" HIGH CHAIN LINK FABRIC (SELVAGE SHALL BE KNUCKLED AT BOTTOM AND TOP)
290'-0"	TENSION WIRE
30	TOP RAIL COUPLER
8	TENSION BARS
56	BRACE BANDS
32	TENSION BANDS
37'-2"	BRACE
8	TENSION ROD
24	RAIL END
26	LINE POST LOOP CAPS
8	END POST DOME TOPS

NOTES:

1. QUANTITIES SHOWN ARE ONLY FOR LABYRINTH WEIR SAFETY FENCES DOES NOT INCLUDE PERIMETER FENCES.
2. QUANTITY OF TIE WIRE REQUIRED NOT INCLUDED IN TABLE ABOVE
3. FOR TYPE AND SPECIFICATION OF FENCING MATERIALS, SEE CONSTRUCTION SPECIFICATION 91.

Freese and Nichols, Inc.
Texas Registered Engineering Firm F-2144
STATE OF TEXAS
DUSTIN G. MORTENSEN
100000
LICENSED
PROFESSIONAL ENGINEER
Dustin Mortensen 4-23-2015

DESIGNED BY: JWE
DRAWN BY: CJG
CHECKED BY: DGM
FILE NAME: TX–NRC–DT–FENCE02.dwg
DATE CHECKED: 4/22/2015

CHAIN LINK FENCE DETAILS

FLOODWATER RETARDING STRUCTURE NO. 6 REHABILITATION
PLUM CREEK WATERSHED
OF THE
PLUM CREEK WATER, TEXAS

United States Department of Agriculture
Natural Resources Conservation Service

REVISIONS	DATE

DRAWING NO. TX–EN–0650

SHEET C–26

ACAD Rel: 19.1s (LMS Tech)
Filename: N:\WR\2012 Drawing\TX–NRC–DT–FENCE02.dwg
Last Saved: 4/10/2015 1:41 PM Saved By: 02389

Plot Date: 4/22/2015 1:45 PM Plot By: 02389 Filename: N:\WR\2012 Drawing\TX–NRC–DT–FENCE02.dwg

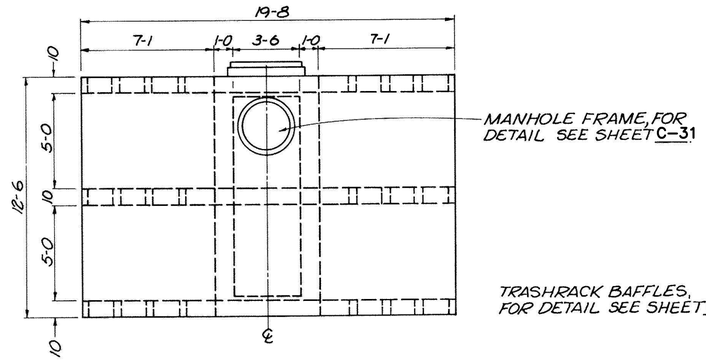

TOP PLAN

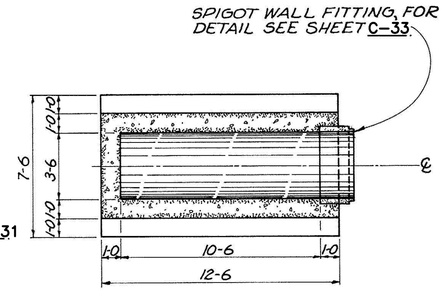

SECTION A-A

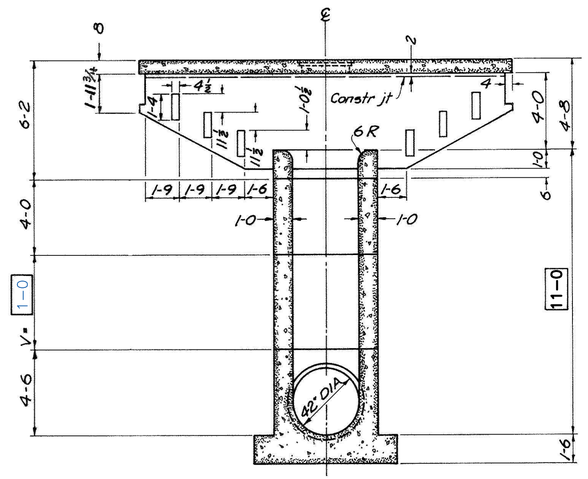

SECTION B-B

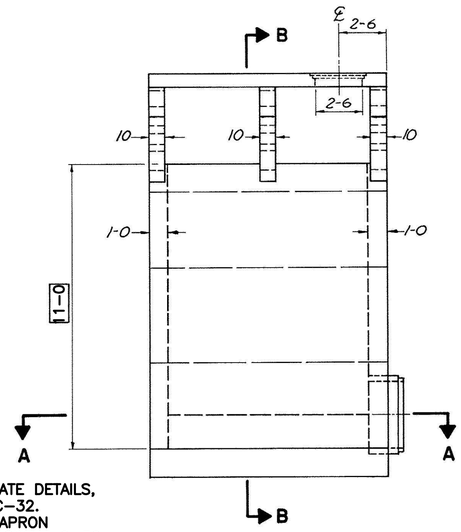

SIDEWALL ELEVATION

NOTES:
1. FOR SLIDE GATE DETAILS, SEE SHEET C-32.
2. FOR SCOUR APRON DETAILS SEE SHEET C-32

0 1 2 3 4 5 6 7 8 9
SCALE IN FEET

DRAWING REVISED IN ACCORDANCE WITH TR-30, TR-31, TR-37 AND TR-68 AUGUST-2014

STANDARD BAFFLE RISER	
STANDARD DWG NO ES-3242 - 1515 R	
DATE 9-79	SHEET 1 OF 4
ADAPTED FROM	
STANDARD COVERED RISER	
DESIGN CONSTANTS f'_c = 4000 psi, f_c = 1600 psi, n = 8, f_s = 20,000 psi	
STANDARD DWG NO. ES-3042 - 2015 R	
DATE 4-65	SHEET 1 OF 4

STEEL SCHEDULE

MARK	SIZE	QUANTITY	LENGTH	TYPE	B	C	TOTAL LENGTH
B1	6	13	7-0	1	——	——	91-0
B2	6	8	12-0	1	——	——	96-0
B3	7	44	11-2	21	3-8	7-6	491-4
B4	6	8	12-0	1	——	——	96-0
B5	6	12	7-0	1	——	——	84-0
B6	6	2	2-10	1	——	——	5-8
B7	6	4	8-5	21	1-0	7-5	33-8
B8	6	4	8-5	21	1-0	7-5	33-8
B9	6	14	8-5	21	1-0	7-5	117-10
B10	6	2	8-5	21	1-0	7-5	16-10
B11	6	14	11-2	1	——	——	156-4
B12	6	4	4-2	1	——	——	16-8
B13	6	20	10-8	21	3-7	7-1	213-4
B14	6	4	8-2	21	1-1	7-1	32-8
B15	6	4	7-10	21	0-9	7-1	31-4
B16	6	6	7-7	21	0-6	7-1	45-6
B17	6	2	9-2	21	2-1	7-1	18-4
B18	6	2	2-9	1	——	——	5-6
B19	6	2	2-10	1	——	——	5-8
R1	6	14	2-11	1	——	——	40-10
R2	6	6	2-11	1	——	——	17-6
R3	6	16	2-11	1	——	——	46-8
R4	6	8	2-11	1	——	——	23-4
R5	6	4	11-2	1	——	——	44-8
R6	6	2	4-2	1	——	——	8-4
R7	6	8	10-8	21	3-7	7-1	85-4

MARK	SIZE	QUANTITY	LENGTH	TYPE	B	C	TOTAL LENGTH
T1	6	12	9-9	1	——	——	117-0
T2	6	16	5-2	1	——	——	82-8
T3	5	6	4-4	1	——	——	26-0
T4	5	12	11-6	1	——	——	138-0
T5	6	4	9-9	1	——	——	39-0
T6	6	4	11-9	21	1-9	10-0	47-0
T7	6	16	5-3	1	——	——	84-0
T8	5	24	10-4	21	3-5	6-11	248-0
T9	5	4	4-4	1	——	——	17-4
T10	5	4	11-6	1	——	——	46-0
T11	5	4	8-8	1	——	——	34-8
T12	5	4	8-2	1	——	——	32-8
T13	5	4	11-8	1	——	——	46-8
T14	5	4	15-2	1	——	——	60-8
T15	5	4	18-8	1	——	——	74-8
T16	5	24	5-1	1	——	——	122-0
T17	5	8	4-8	1	——	——	37-4
T18	5	8	4-3	1	——	——	34-0
T19	5	8	3-9	1	——	——	30-0
T20	5	8	3-3	1	——	——	26-0
T21	5	8	2-10	1	——	——	22-8
T22	5	8	8-2	23	2-4	5-10	65-4
T23	5	8	10-4	21	3-5	6-11	82-8
T24	5	2	8-8	1	——	——	17-4
T25	5	2	8-2	1	——	——	16-4
T26	5	2	11-8	1	——	——	23-4
T27	5	2	15-2	1	——	——	30-4
T28	5	2	18-8	1	——	——	37-4
T29	5	8	7-1	21	1-9	5-4	56-8
T30	5	4	6-8	21	1-9	4-11	26-8
T31	5	4	6-3	21	1-9	4-6	25-0
T32	5	4	5-9	21	1-9	4-0	23-0
T33	5	4	5-4	21	1-9	3-7	21-4
T34	5	4	4-10	21	1-9	3-1	19-4
T35	5	4	4-5	21	1-9	2-8	17-8
T36	5	4	5-11	1	——	——	23-8
T37	5	6	3-6	21	1-9	1-9	21-0
T38	5	2	2-7	21	0-10	1-9	5-2
T39	4	2	8-1	1	——	——	16-2
T40	4	20	11-6	1	——	——	230-0
T41	4	10	19-4	1	——	——	193-4
T42	4	4	8-3	1	——	——	33-0
T43	5	2	8-2	1	——	——	16-4
T44	5	20	11-9	1	——	——	235-0
T45	5	2	12-2	1	——	——	24-4
T46	4	10	19-4	1	——	——	193-4
T47	4	4	8-2	1	——	——	32-8

STEEL QUANTITIES

WEIGHT PER LIN FOOT	BAR SIZE	LENGTH IN FEET: B,T & R BARS	LENGTH IN FEET: R1 THRU R7 BARS	TOTAL LENGTH IN FEET	TOTAL WEIGHT IN POUNDS
0.668	4	698-6	——	698-6	467
1.043	5	1784-6	——	1784-6	2608
1.502	6	1469-8	266-8	1736-4	2494
2.044	7	491-4	——	491-4	1004
2.670	8	——	——	——	——
TOTAL WEIGHT ALL BARS					5940

CONCRETE QUANTITIES

29.9 + 1.18 V = 31.1 CU.YDS

Freese and Nichols, Inc.
Texas Registered Engineering Firm F-2144
STATE OF TEXAS
DUSTIN G. MORTENSEN
100000
LICENSED
PROFESSIONAL ENGINEER
4-23-2015

DESIGNED BY: JWE
DRAWN BY: CJG
CHECKED BY: DGM
FILE NAME: TX-NRC-DT-MISC02.dwg
DATE CHECKED: 4/22/2015

RISER - STEEL SCHEDULE PLAN, ELEVATION, AND SECTIONS

FLOODWATER RETARDING STRUCTURE NO. 6 REHABILITATION
PLUM CREEK WATERSHED
OF THE
PLUM CREEK WATER, TEXAS

NRCS
United States Department of Agriculture
Natural Resources Conservation Service

REVISIONS | DATE

DRAWING NO. TX-EN-0650

SHEET C-27

ACAD Rel: 19.1s (LMS Tech)
Filename: N:\WR\2012 Drawing\TX-NRC-DT-MISC02.dwg
Last Saved: 2/4/2015 4:31 PM Saved By: cjg

Plot Date: 4/22/2015 1:45 PM Plot By: 02389 Filename: N:\WR\2012 Drawing\TX-NRC-DT-MISC02.dwg

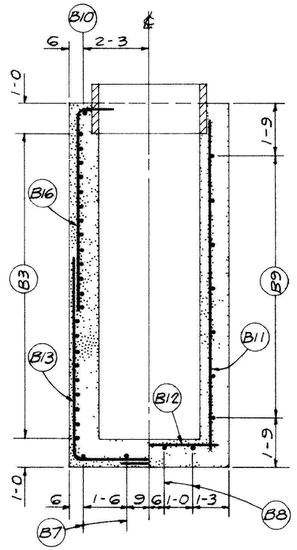

SECTION A-A

NOTE:
CUT OR SHIFT STEEL AS REQUIRED TO CLEAR SLIDE GATE OPENING WITH 2" MINIMUM COVER.

12"x12" SLIDE GATE OPENING

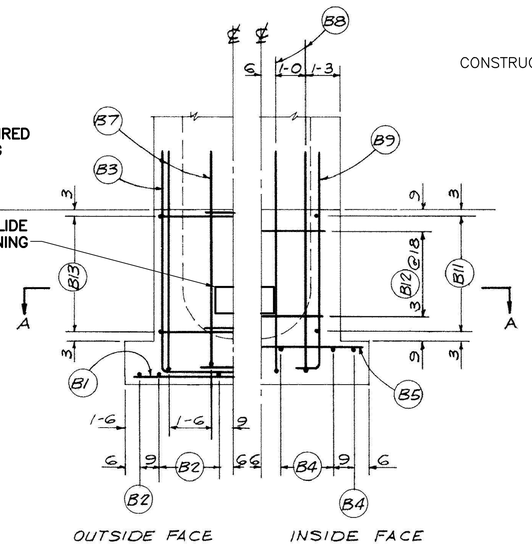

UPSTREAM ELEVATION

CONSTRUCTION JOINT

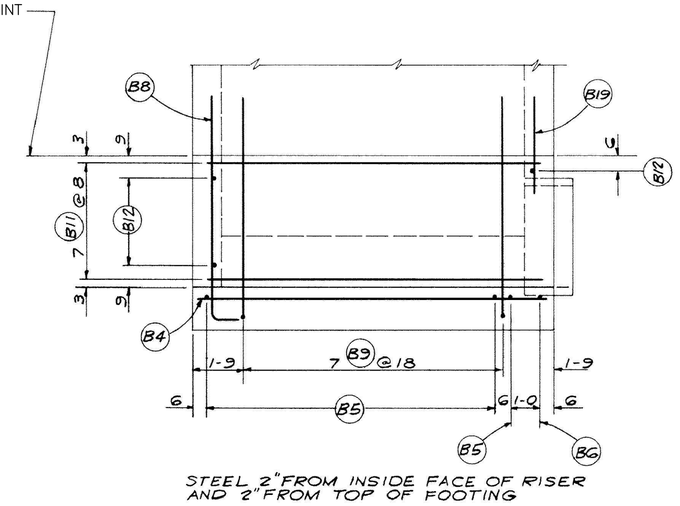

STEEL 2"FROM INSIDE FACE OF RISER AND 2"FROM TOP OF FOOTING

SIDEWALL ELEVATION

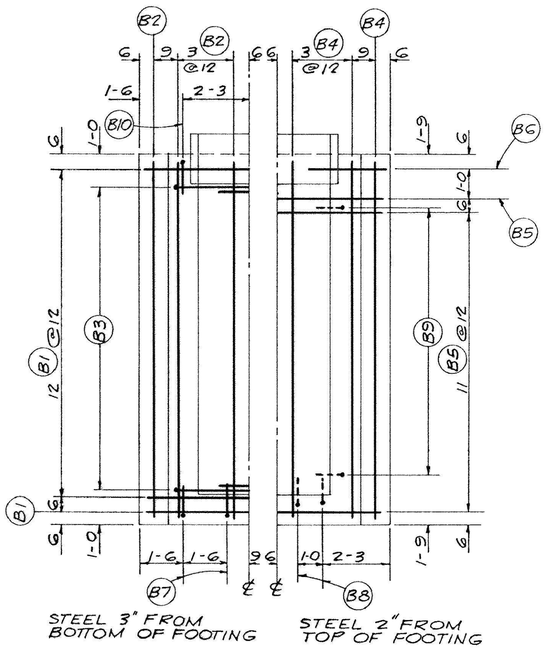

FOOTING PLAN

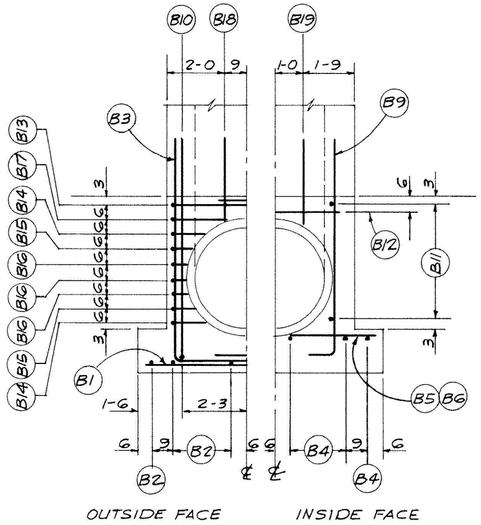

DOWNSTREAM ELEVATION

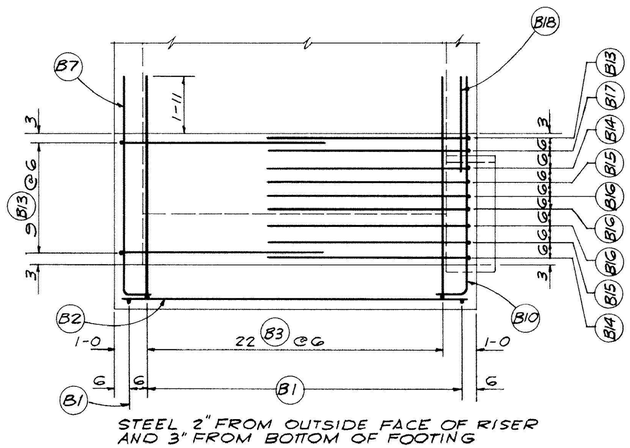

SIDEWALL ELEVATION

STANDARD BAFFLE RISER	
STANDARD DWG. NO. ES- 3242 - 1515R	
DATE 9-79	SHEET 2 OF 4
ADAPTED FROM	
STANDARD COVERED RISER	
DESIGN CONSTANTS f'_c = 4000 psi, n = 8	f_c = 1600 psi, f_s = 20,000 psi
STANDARD DWG. NO. ES- 3042 - 2015R	
DATE 8-66	SHEET 2 OF 4

DRAWING REVISED IN ACCORDANCE WITH TR-30, TR-31, TR-37 AND TR-68 AUGUST-2014

0 2 4 6
SCALE IN FEET

Prepared by: Freese and Nichols, Inc.
Texas Registered Engineering Firm F-2144
STATE OF TEXAS
DUSTIN G. MORTENSEN
100000
LICENSED
PROFESSIONAL ENGINEER
4-23-2015

DESIGNED BY:	JWE
DRAWN BY:	CJG
CHECKED BY:	DGM
FILE NAME:	TX-NRC-DT-MISC09.dwg
DATE CHECKED:	4/22/2015

RISER - STEEL PLACEMENT 1

FLOODWATER RETARDING STRUCTURE NO. 6 REHABILITATION
PLUM CREEK WATERSHED
OF THE
PLUM CREEK WATER, TEXAS

NRCS
United States Department of Agriculture
Natural Resources Conservation Service

REVISIONS	DATE

DRAWING NO.
TX-EN-0650

SHEET
C-28

ACAD Rel: 19.1s (LMS Tech)
Filename: N:\WR\2012 Drawing\TX-NRC-DT-MISC09.dwg
Last Saved: 12/19/2014 4:13 PM Saved By: dgm

Plot Date: 4/22/2015 1:45 PM Plot By: 02389 Filename: N:\WR\2012 Drawing\TX-NRC-DT-MISC09.dwg

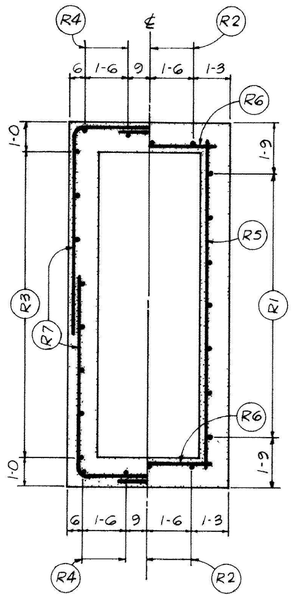

OUTSIDE FACE INSIDE FACE

SECTION A-A

OTHER SECTIONS SIMILAR

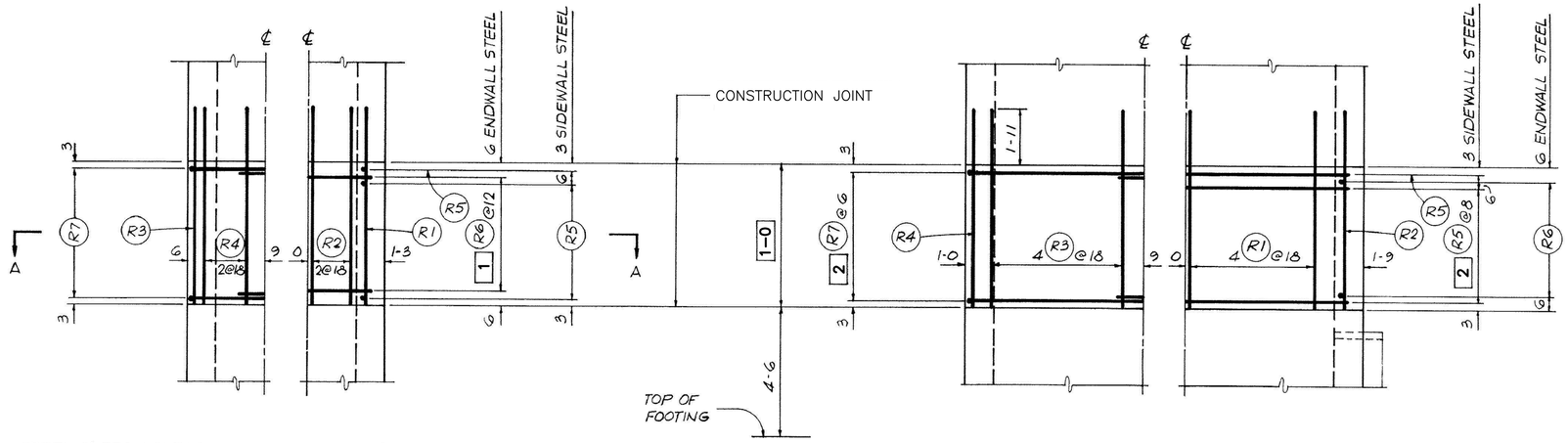

STEEL 2" FROM OUTSIDE FACE STEEL 2" FROM INSIDE FACE

ENDWALL ELEVATION

STEEL 2" FROM OUTSIDE FACE STEEL 2" FROM INSIDE FACE

SIDEWALL ELEVATION

STANDARD BAFFLE RISER	
STANDARD DWG. NO. ES-3242 - 1515 R	
DATE 9-79	SHEET 3 OF 4
ADAPTED FROM	
STANDARD COVERED RISER	
DESIGN CONSTANTS f'_c = 4000 psi, f_c = 1600 psi, n = 8, f_s = 20,000 psi	
STANDARD DWG. NO. ES-3042 - 2015R	
DATE 8-66	SHEET 3 OF 4

DRAWING REVISED IN ACCORDANCE WITH TR-30, TR-31, TR-37 AND TR-68 AUGUST-2014

0 2 4 6
SCALE IN FEET

Freese and Nichols, Inc.
Texas Registered Engineering Firm F-2144

STATE OF TEXAS
DUSTIN G. MORTENSEN
100000
LICENSED
PROFESSIONAL ENGINEER
4-23-2015

DESIGNED BY:	JWE
DRAWN BY:	CJG
CHECKED BY:	DGM
FILE NAME:	TX-NRC-DT-MISC08.dwg
DATE CHECKED:	4/22/2015

RISER - STEEL PLACEMENT 2

FLOODWATER RETARDING STRUCTURE NO. 6 REHABILITATION
PLUM CREEK WATERSHED
OF THE
PLUM CREEK WATER, TEXAS

United States Department of Agriculture
Natural Resources Conservation Service

REVISIONS	DATE

DRAWING NO.
TX-EN-0650

SHEET
C-29

ACAD Rel: 19.1s (LMS Tech)
Filename: N:\WR\2012 Drawing\TX-NRC-DT-MISC08.dwg
Last Saved: 2/5/2015 1:34 PM Saved By: 02389

Plot Date: 4/22/2015 1:45 PM Plot By: 02389 Filename: N:\WR\2012 Drawing\TX-NRC-DT-MISC08.dwg

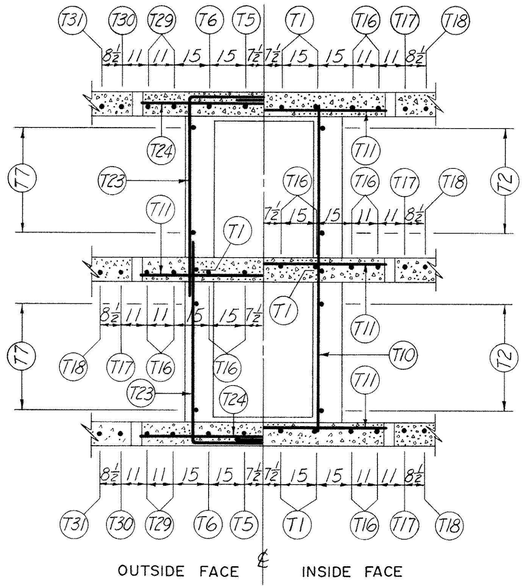

SECTION A-A

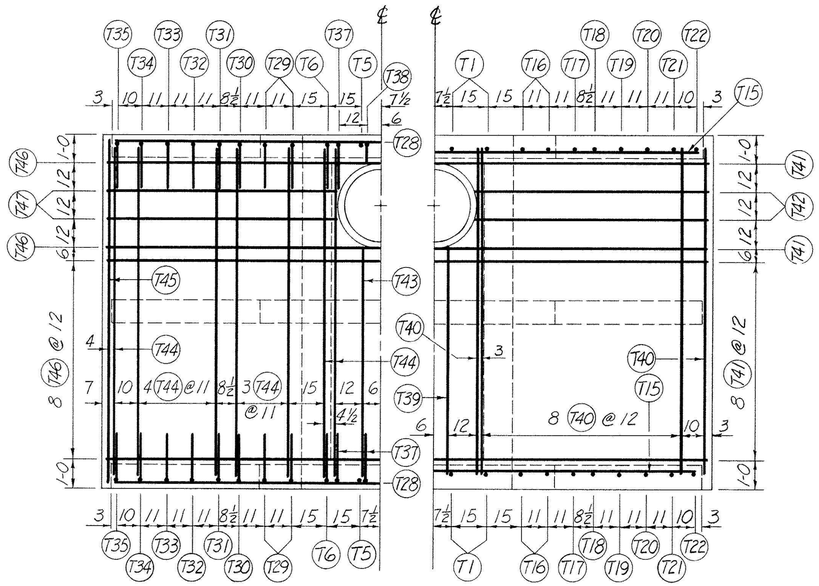

COVER SLAB PLAN

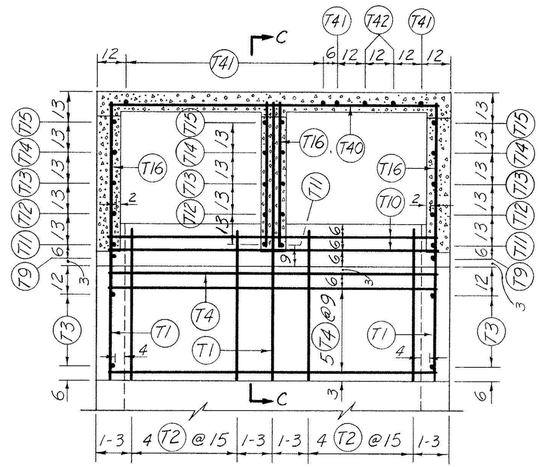

STEEL 2" FROM INSIDE FACE
(SEE NOTE 5)

SECTION B-B

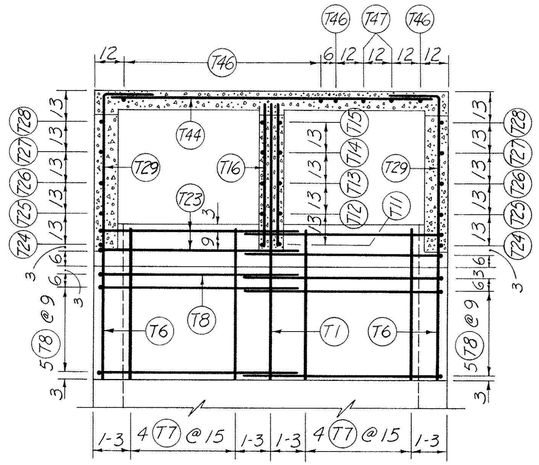

STEEL 2" FROM OUTSIDE FACE

SECTION B-B

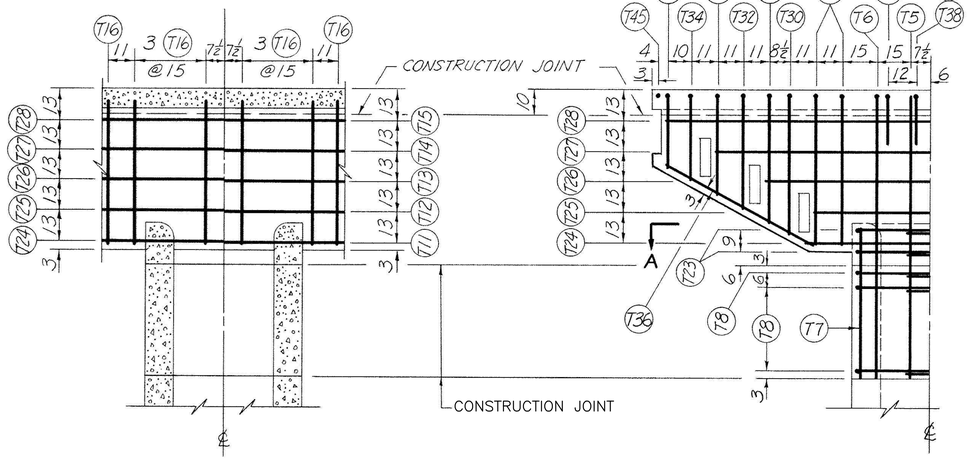

(SEE NOTE 4)

SECTION C-C

ENDWALL ELEVATION

0 1 2 3 4
Scale in Feet

BAR TYPES

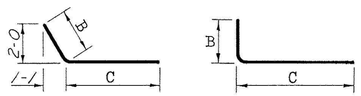

TYPE 23

TYPE 21

NOTES:
1. BAR DIMENSIONS ARE OUT TO OUT OF BAR.
2. RADIUS OF BENDS EQUAL 3 BAR DIAMETERS FOR SIZES ≤ #7 AND 4 BAR DIAMETERS FOR #8.
3. THE 2", 3", AND 4" DISTANCES FROM SPECIFIED CONCRETE SURFACES ARE CLEAR DISTANCE.
4. STEEL NOT SHOWN IS IDENTICAL TO INSIDE ENDWALL STEEL.
5. BARS (T1), (T3) AND (T9) IN ENDWALLS BELOW CREST ARE 4" FROM INSIDE FACE.

STANDARD BAFFLE RISER		
DESIGN CONSTANTS	f'_c = 4000 psi, n = 8	f_c = 1600 psi, f_s = 20,000 psi
STANDARD DWG. NO.	ES- 3242 - 1515R	
DATE 9 - 79	SHEET 4 OF 4	

DRAWING REVISED IN ACCORDANCE WITH TR-30, TR-31, TR-37 AND TR-68 AUGUST-2014

STR. TYPE 1

Freese and Nichols, Inc.
Texas Registered Engineering Firm F-2144
STATE OF TEXAS
DUSTIN G. MORTENSEN
100000
LICENSED
PROFESSIONAL ENGINEER
4-23-2015

DESIGNED BY:	JWE
DRAWN BY:	CJG
CHECKED BY:	DGM
FILE NAME:	TX-NRC-DT-MISC07.dwg
DATE CHECKED:	4/22/2015

RISER - STEEL PLACEMENT 3

FLOODWATER RETARDING STRUCTURE NO. 6 REHABILITATION
PLUM CREEK WATERSHED
OF THE
PLUM CREEK WATER, TEXAS

United States Department of Agriculture
Natural Resources Conservation Service

REVISIONS	DATE

DRAWING NO. TX-EN-0650

SHEET C-30

ACAD Rel: 19.1s (LMS Tech)
Filename: N:\WR\2012 Drawing\TX-NRC-DT-MISC07.dwg
Last Saved: 12/19/2014 4:14 PM Saved By: dgm

Plot Date: 4/22/2015 1:46 PM Plot By: 02389 Filename: N:\WR\2012 Drawing\TX-NRC-DT-MISC07.dwg

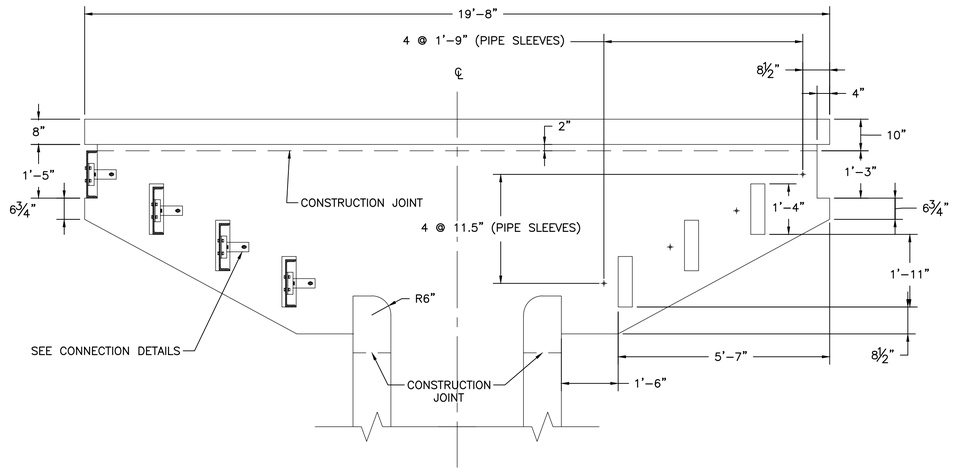

1 ENDWALL ELEVATION

0 1' 2' 4'

1/2"=1'-0"

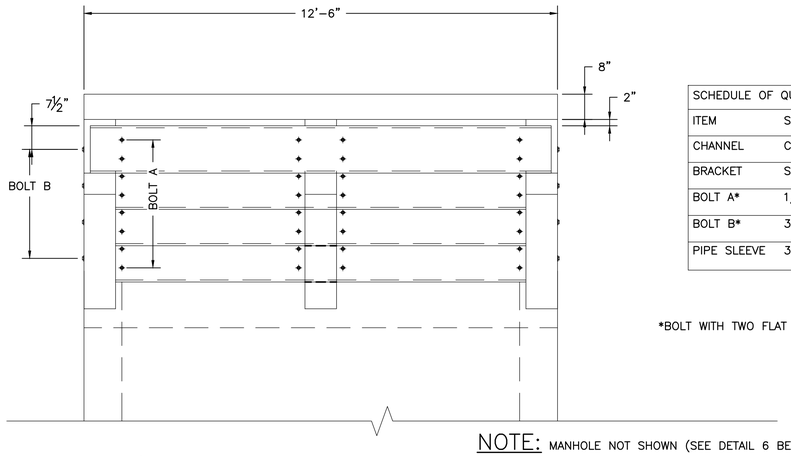

2 ENDWALL ELEVATION

0 1' 2' 4'

1/2"=1'-0"

NOTE: MANHOLE NOT SHOWN (SEE DETAIL 6 BELOW)

SCHEDULE OF QUANTITIES		
ITEM	SIZE	QUANTITY
CHANNEL	C 15X33.9	8
BRACKET	SEE DETAIL	32
BOLT A*	1/2"X2-1/2"	64
BOLT B*	3/8"X12'	24
PIPE SLEEVE	3/4"X10"	24

*BOLT WITH TWO FLAT WASHERS, ONE LOCK WASHER AND NUT.

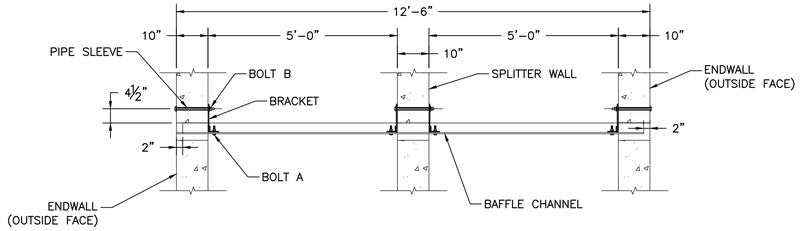

3 SECTIONAL TOP VIEW

0 1' 2' 4'

1/2"=1'-0"

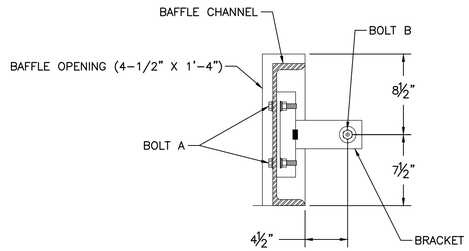

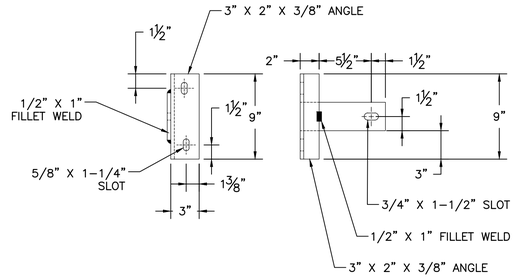

NOTE: FABRICATE BRACKET FROM ⅜" STEEL PLATE AND ANGLE

4 SIDE VIEW

0 4" 8" 1'

1-1/2"=1'-0"

5 BRACKET

0 4" 8" 1'

1-1/2"=1'-0"

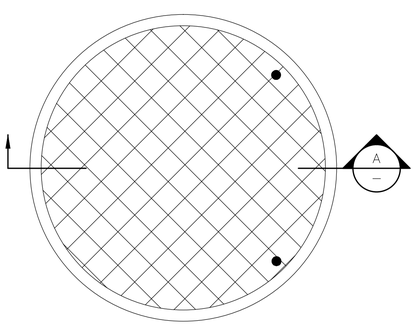

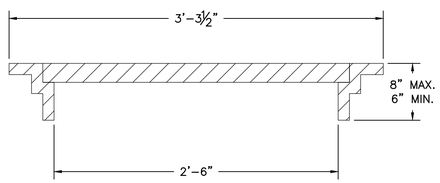

SECTION A

NOTE:
MANHOLE COVER SHALL BE NEENAH FOUNDRY COMPANY R-6078 ROUND SERIES WITH TYPE E LOCKING DEVICE (WITH STAINLESS STEEL CAP SCREWS) OR EQUIVALENT AS APPROVED BY THE ENGINEER. IF AN APPROVED EQUIVALENT IS USED, IT SHALL HAVE A SIMILAR LOCKING DEVICE. (SEE CONSTRUCTION SPEC. 81)

6 MANHOLE COVER DETAILS

NOT TO SCALE

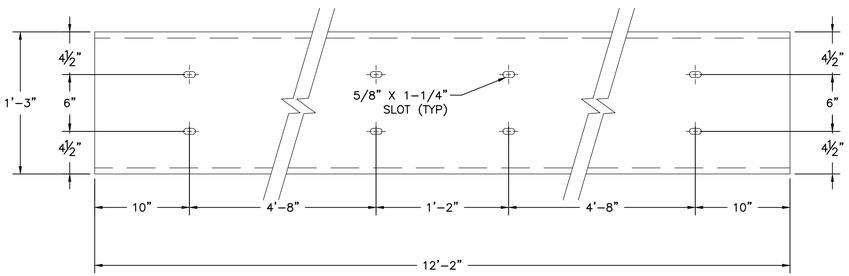

NOTE:
BAFFLE CHANNEL TO BE TYPE C 15X33.9.
STEEL FOR THE BAFFLE CHANNEL SHALL BE ASTM A36 STEEL.
REFER TO CONSTRUCTION SPECIFICATION 81 AND MATERIAL SPECIFICATIONS 581 AND 582.

7 BAFFLE CHANNEL

0 4" 8" 1'

1-1/2"=1'-0"

Freese and Nichols, Inc.
Texas Registered Engineering Firm F-2144
STATE OF TEXAS
DUSTIN G. MORTENSEN
100000
LICENSED
PROFESSIONAL ENGINEER
4-23-2015

DESIGNED BY: JWE
DRAWN BY: CJG
CHECKED BY: DGM
FILE NAME: TX-NRC-DT-MISC03.dwg
DATE CHECKED: 4/22/2015

TRASHRACK AND MANHOLE COVER - DETAILS

FLOODWATER RETARDING STRUCTURE NO. 6 REHABILITATION
PLUM CREEK WATERSHED
OF THE
PLUM CREEK WATER, TEXAS

United States Department of Agriculture
Natural Resources Conservation Service

REVISIONS	DATE

DRAWING NO.
TX-EN-0650

SHEET
C-31

ACAD Rel: 19.1s (LMS Tech)
Filename: N:\WR\2012 Drawing\TX-NRC-DT-MISC03.dwg
Last Saved: 4/10/2015 1:43 PM Saved By: 02389

Plot Date: 4/22/2015 1:46 PM Plot By: 02389 Filename: N:\WR\2012 Drawing\TX-NRC-DT-MISC03.dwg

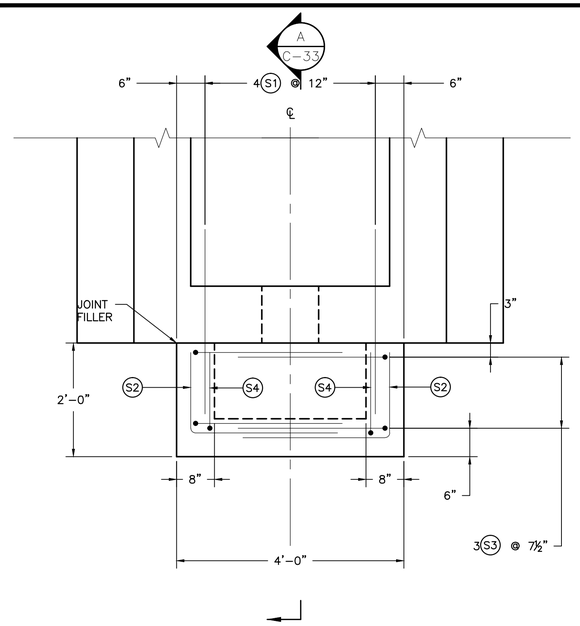

1 — SCOUR APRON PLAN

0 6" 1' 2'
3/4"=1'-0

BAR NO.	SIZE	TYPE	QTY.	LENGTH	B	C	TOTAL LENGTH
S1	6	1	4	3-3	-	-	13-0
S2	4	21	4	3-11	1-6	2-5	15-8
S3	4	21	6	4-4	1-11	2-5	26-0
S4	4	21	4	3-5	1-11	1-6	13-8
TOTAL STEEL (SIZE 6) = 13'-0" = 19.5 LBS.							
TOTAL STEEL (SIZE 4) = 55'-4" = 37.0 LBS.							
TOTAL STEEL IN SCOUR APRON = 56.5 LBS.							
TOTAL REINFORCED CONCRETE IN SCOUR APRON = 0.4 CU. YDS.							

NOTES:

1. THE SCOUR APRON SHALL BE FASTENED TO THE INLET BASE WITH 4 S1 BARS, 3'-3" LONG. ALL STEEL SHALL BE CENTERED IN THE TOP SLAB AND FOOTING, EXCEPT WHERE DIMENSIONED.
2. JOINT FILLER SHALL BE ¾" PREFORMED EXPANSION JOINT FILLER. CONCRETE SHALL EQUAL OR EXCEED CLASS 4000.

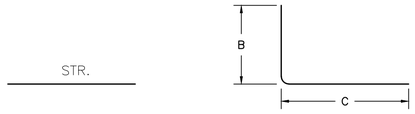

TYPE 1 TYPE 2

NOTES:

1. BAR DEMENSIONS ARE OUT TO OUT OF BAR.
2. RADIUS OF BENDS EQUAL 3 BAR DIAMETERS.

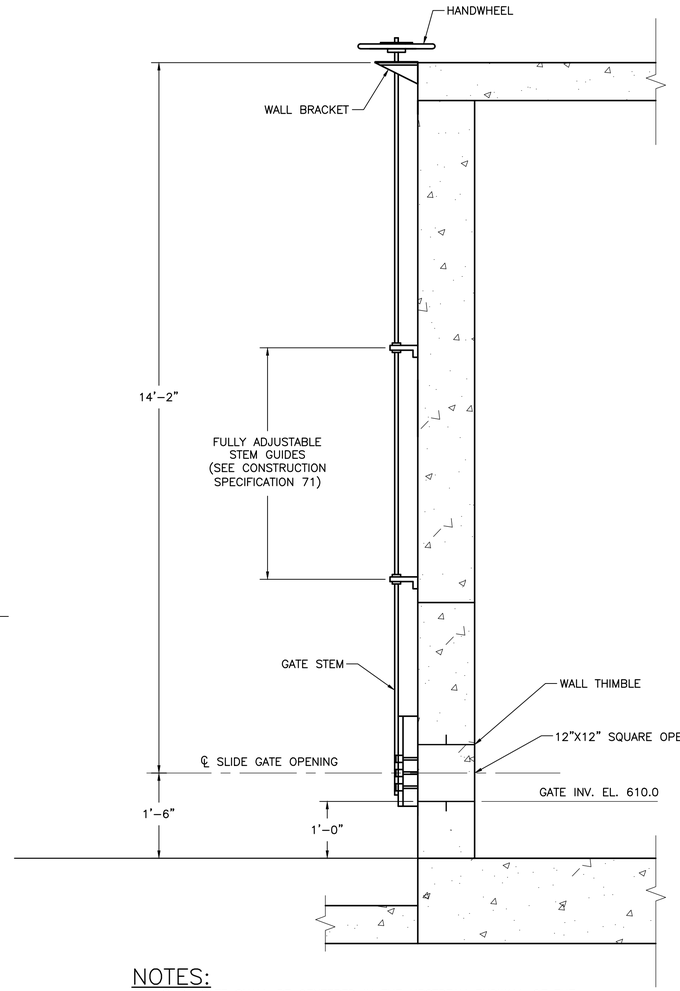

NOTES:

THE SLIDE GATE SHALL BE CENTERED IN THE UPSTREAM ENDWALL OF THE PRINCIPAL SPILLWAY INLET. WALL BRACKET AND STEM GUIDES SHALL HAVE SUFFICIENT ADJUSTMENT TO ENSURE A VERTICAL MOUNTING FOR THE GATE STEM. SEE MANUFACTURER'S DATA FOR DETAILS OF GATE FRAME, STEM SPLICES, AND ANCHOR BOLT LAYOUT. (SEE CONSTRUCTION SPECIFICATION 71.)

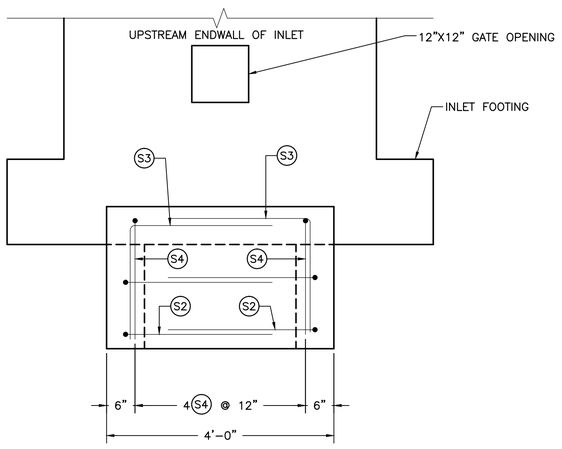

2 — SCOUR APRON UPSTREAM ELEVATION

0 6" 1' 2'
3/4"=1'-0

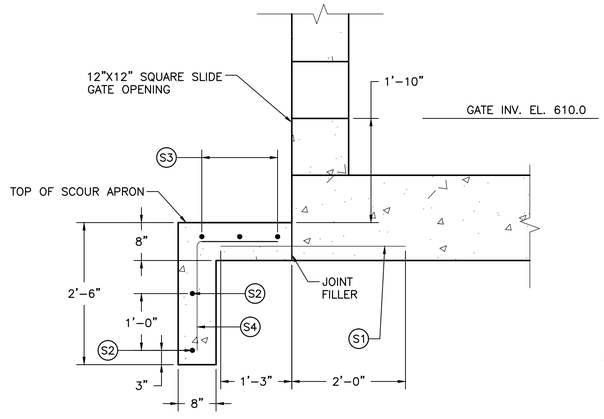

NOTES:

INLET STEEL NOT SHOWN FOR CLARITY.

A — C-33 SCOUR APRON SECTION

0 6" 1' 2'
3/4"=1'-0

3 — 12"X12" SLIDE GATE DETAILS

0 6" 1' 2'
3/4"=1'-0

Texas Registered Engineering Firm F-2144
Freese and Nichols, Inc.

STATE OF TEXAS
DUSTIN G. MORTENSEN
100000
LICENSED
PROFESSIONAL ENGINEER
4-23-2015

DESIGNED BY:	JWE
DRAWN BY:	CJG
CHECKED BY:	DGM
FILE NAME:	TX-NRC-DT-MISC05.dwg
DATE CHECKED:	4/22/2015

SCOUR APRON AND SLUICE GATE DETAILS

FLOODWATER RETARDING STRUCTURE NO. 6 REHABILITATION
PLUM CREEK WATERSHED
OF THE
PLUM CREEK WATER, TEXAS

United States Department of Agriculture
Natural Resources Conservation Service

REVISIONS DATE

DRAWING NO.
TX-EN-0650

SHEET
C-32

ACAD Rel: 19.1s (LMS Tech)
Filename: N:\WR\2012 Drawing\TX-NRC-DT-MISC05.dwg
Last Saved: 4/10/2015 1:48 PM Saved By: 02389

Plot Date: 4/22/2015 1:46 PM Plot By: 02389 Filename: N:\WR\2012 Drawing\TX-NRC-DT-MISC05.dwg

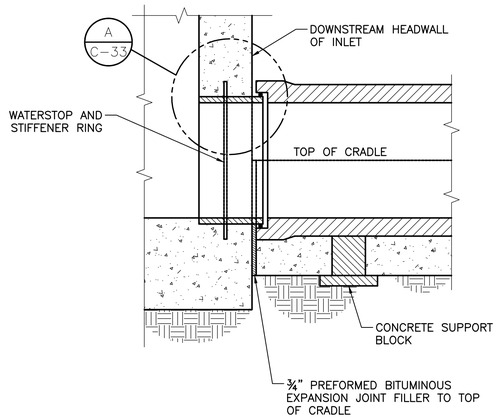

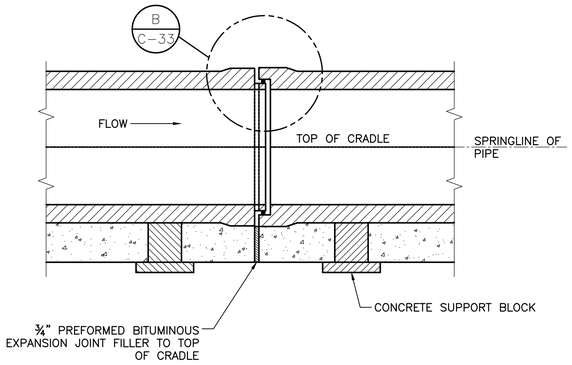

STRENGTH REQUIREMENTS			
	INTERNAL LOAD	EXTERNAL LOAD	
INSIDE DIAMETER OF PIPE	HYDROSTATIC PRESSURE	MINIMUM 3-EDGE BEARING STRENGTH IN POUNDS PER LINEAL FOOT OF PIPE	
		APPLICABLE STANDARD SPECIFICATION	
INCHES	HEAD OF WATER	AWWA C-301	AWWA C-300
INCHES	FEET	LOAD TO PRODUCE 0.001 IN. CRACK ONE FOOT LONG	LOAD TO PRODUCE 0.01 INCH CRACK ONE FOOT LONG
42	50	10,500	-

THE OUTSIDE DIAMETER OF PIPE ASSUMED IN DESIGN IS 49 INCHES. WHERE THE PIPE FURNISHED HAS AN OUTSIDE DIAMETER GREATER THAN ASSUMED IN DESIGN, THE THREE-EDGE BEARING STRENGTH OF THE PIPE FURNISHED MUST NOT BE LESS THAN THE SPECIFIED THREE-EDGE BEARING STRENGTH MULTIPLIED BY THE RATIO OF THE OUTSIDE DIAMETER OF THE PIPE FURNISHED TO THE OUTSIDE DIAMETER ASSUMED IN DESIGN.

JOINT REQUIREMENTS			
LENGTH OF PIPE SECTION	MINIMUM JOINT LENGTH	MINIMUM JOINT LIMITING ANGLE	
FEET	INCHES	RADIANS	DEGREES
10	3-1/8	0.0157	0.90
20	3-1/8	0.0157	0.90

FOR PIPE LENGTH OTHER THAN SHOWN, JOINT REQUIREMENTS WILL BE DETERMINED BY THE ENGINEER.

WHERE PIPES OF DIFFERENT LENGTH ARE CONNECTED, ADJOINTING PIPES SHALL MEET THE REQUIREMENTS OF THE LONGER PIPE.

PRIOR TO DELIVERY OF PIPE, THE PIPE JOINT DETAIL PROPOSED FORUSE SHALL BE SUBMITTED TO THE CONTRACTING OFFICER FOR APPROVAL.

JOINT LENGTH EQUALS WATERTIGHT JOINT EXTENSIBILITY PLUS JOINT GAP.

1 C-27 DETAIL OF SPIGOT WALL FITTING
NOT TO SCALE

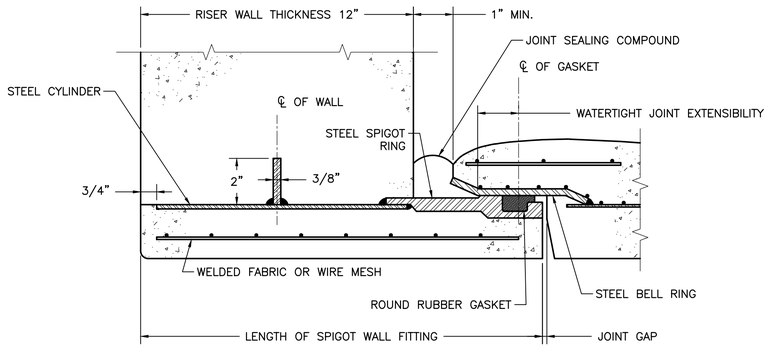

2 – DETAIL OF PIPE JOINT
NOT TO SCALE

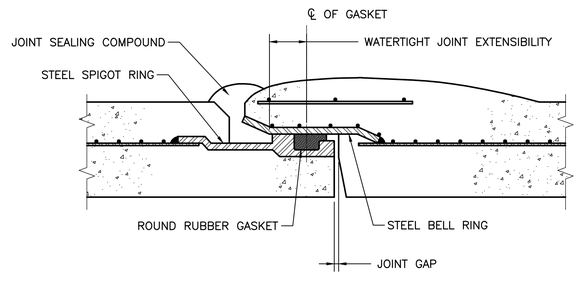

A C-33 DETAIL A
NOT TO SCALE

B C-33 DETAIL B
NOT TO SCALE

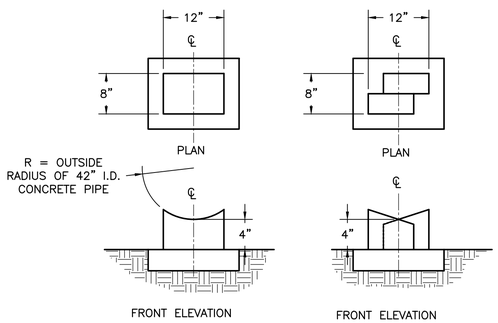

SUFFICIENT BLOCKS OR WEDGES SHALL BE PROVIDED TO SUPPORT THE PIPE TO THE REQUIRED LINE AND GRADE. THE CONTRACTOR SHALL DETERMINE THE NUMBER AND SIZE OF BLOCKS OR WEDGES REQUIRED. A MINIMUM OF TWO SUPPORTS SHALL BE REQUIRED FOR EACH SECTION OF PIPE.

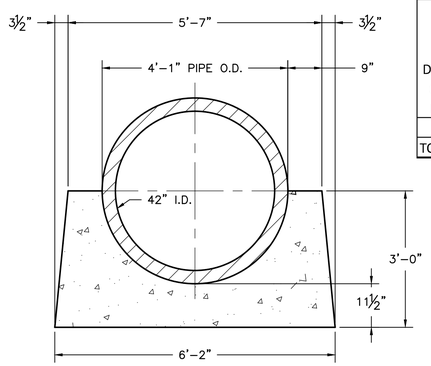

CRADLE CONCRETE QUANTITES				
INSIDE DIAMETER OF PIPE INCHES	OUTSIDE DIAMETER OF PIPE INCHES	CONCRETE PER LINEAL FOOT OF CRADLE CU. YDS.	LENGTH OF CRADLE FEET	TOTAL CONCRETE QUANTITY CU. YDS.
42	49	0.41	186.5	76.5
TOTAL CONCRETE QUANTITY = 76.5				

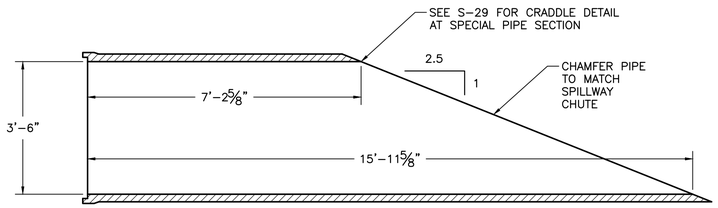

3 – SUGGESTED SUPPORT BLOCKS AND WEDGES
NOT TO SCALE

4 – DETAIL OF 42" PIPE CRADLE
NOT TO SCALE

5 C-22 DETAIL OF SPECIAL PIPE SECTION
NOT TO SCALE

Texas Registered Engineering Firm F-2144
Freese and Nichols, Inc.
STATE OF TEXAS
DUSTIN G. MORTENSEN
100000
LICENSED
PROFESSIONAL ENGINEER
Dustin Mortensen 4-23-2015

DESIGNED BY: JWE
DRAWN BY: CJG
CHECKED BY: DGM
FILE NAME: TX-NRC-DT-PIPE.dwg
DATE CHECKED: 4/22/2015

PRINCIPAL SPILLWAY - PIPE DETAILS

FLOODWATER RETARDING STRUCTURE NO. 6 REHABILITATION
PLUM CREEK WATERSHED
OF THE
PLUM CREEK WATER, TEXAS

United States Department of Agriculture
Natural Resources Conservation Service

REVISIONS DATE

DRAWING NO.
TX-EN-0650

SHEET
C-33

ACAD Rel: 19.1s (LMS Tech)
Filename: N:\WR\2012 Drawing\TX-NRC-DT-PIPE.dwg
Last Saved: 4/21/2015 10:36 AM Saved By: 02389

Plot Date: 4/22/2015 1:46 PM Plot By: 02389 Filename: N:\WR\2012 Drawing\TX-NRC-DT-PIPE.dwg

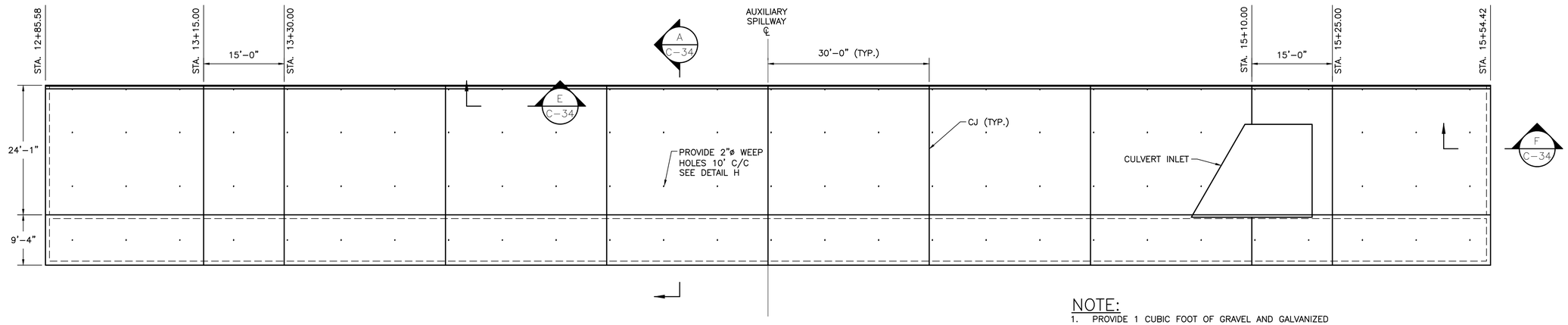

NOTE:
1. PROVIDE 1 CUBIC FOOT OF GRAVEL AND GALVANIZED HARDWARE CLOTH AT ALL WEEP HOLE LOCATIONS

SLOPE PAVING PLAN VIEW

0 4' 8' 16'
3/32"=1'-0"

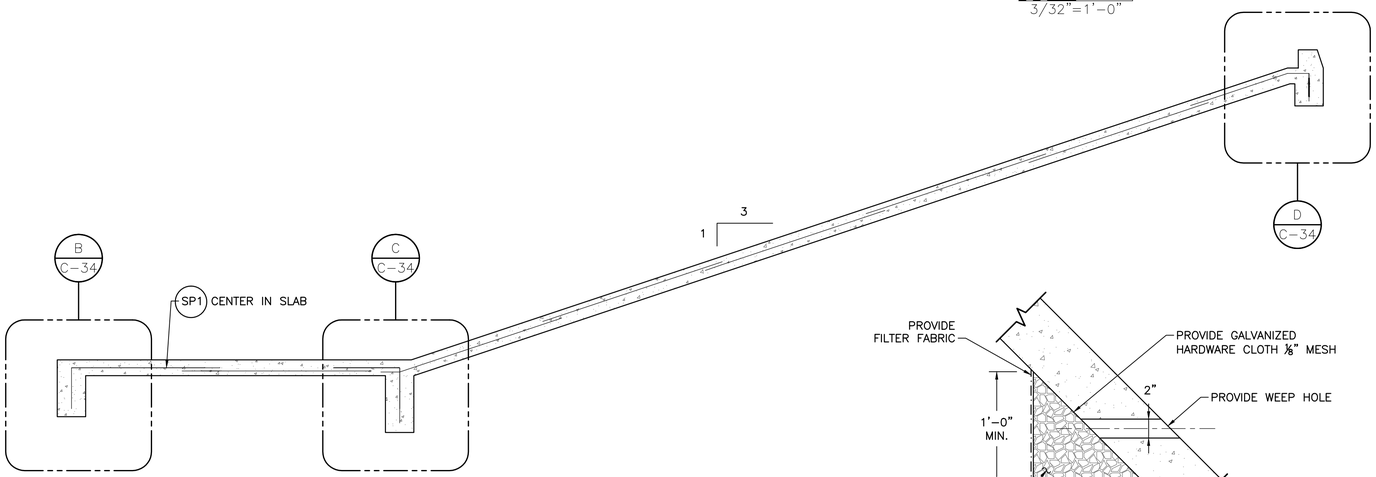

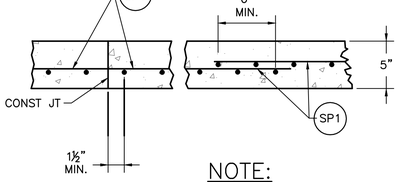

NOTE:
PROVIDE WELDED WIRE REINFORCEMENT (WWR) 4X4-D4.0XD4.0 USE LAP SPLICES OF A MINIMUM 6 INCHES, MEASURED FROM THE TRANSVERSE WIRE OF WWR.

G — REINFORCEMENT DETAILS
0 4" 8" 1'
1-1/2"=1'-0"

A C-34 — SLOPE PAVING SECTION
0 6" 1' 2'
3/4"=1'-0

H C-34 — WEEP HOLE DETAIL
0 4" 8" 1'
1-1/2"=1'-0"

Mark	Size (Bar #)	Quantity	Type	B (ft) (in)	C (ft) (in)	D (ft) (in)	Length (ft) (in)	Total Length (ft) (in)
SP1	4x4-W4.0/W4.0	8,820 SQ. FT.						
SP2	5	109	U	1-0	1-1	1-1	3-2	345-2
SP3	5	18	ST	32-0	–	–	32-0	576-0

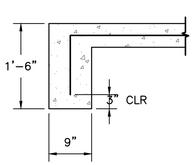

B C-34 — END WALL
0 6" 1' 2'
3/4"=1'-0

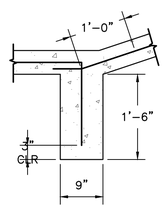

C C-34 — INTERMEDIATE TOEWALL
0 6" 1' 2'
3/4"=1'-0

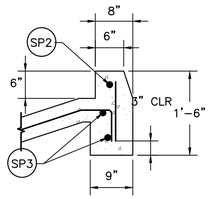

D C-34 — CURB
0 6" 1' 2'
3/4"=1'-0

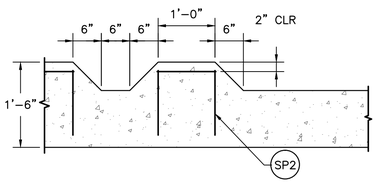

E C-34 — SAWTOOTH CURB DETAIL
0 6" 1' 2'
3/4"=1'-0

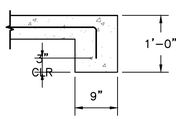

F C-34 — SIDE WALL
0 6" 1' 2'
3/4"=1'-0

Prepared by:
Freese and Nichols, Inc.
Texas Registered Engineering Firm F-2144
STATE OF TEXAS
DUSTIN G. MORTENSEN
100000
LICENSED
PROFESSIONAL ENGINEER
4-23-2015

DESIGNED BY: JWE
DRAWN BY: CJG
CHECKED BY: DGM
FILE NAME: TX-NRC-DT-MISC06.dwg
DATE CHECKED: 4/22/2015

SLOPE PAVING DETAILS

FLOODWATER RETARDING STRUCTURE NO. 6 REHABILITATION
PLUM CREEK WATERSHED
OF THE
PLUM CREEK WATER, TEXAS

United States Department of Agriculture
Natural Resources Conservation Service

REVISIONS DATE

DRAWING NO.
TX-EN-0650

SHEET
C-34

ACAD Rel: 19.1s (LMS Tech)
Filename: N:\WR\2012 Drawing\TX-NRC-DT-MISC06.dwg
Last Saved: 4/16/2015 9:31 AM Saved By: 02389

Plot Date: 4/22/2015 1:46 PM Plot By: 02389 Filename: N:\WR\2012 Drawing\TX-NRC-DT-MISC06.dwg

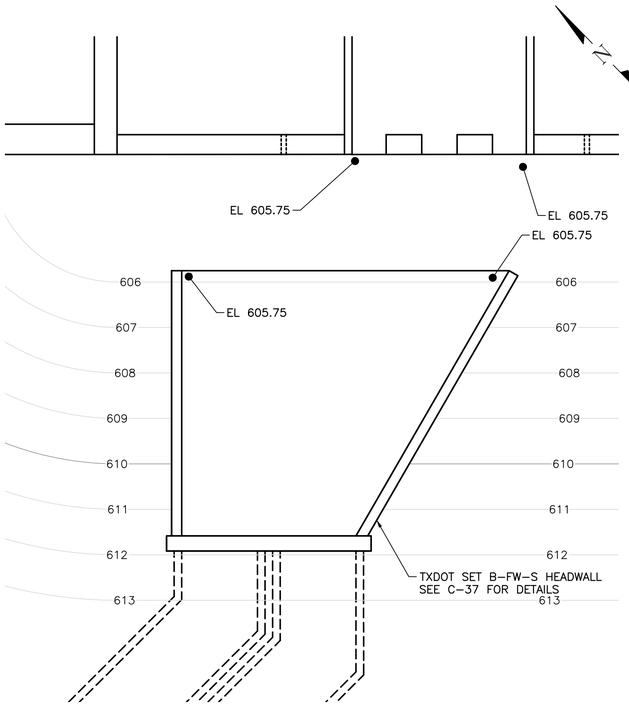

1 C-16 PRINCIPAL SPILLWAY CULVERT INLET

0 5' 10'
SCALE IN FEET

LEGEND:
SPOT ELEVATION

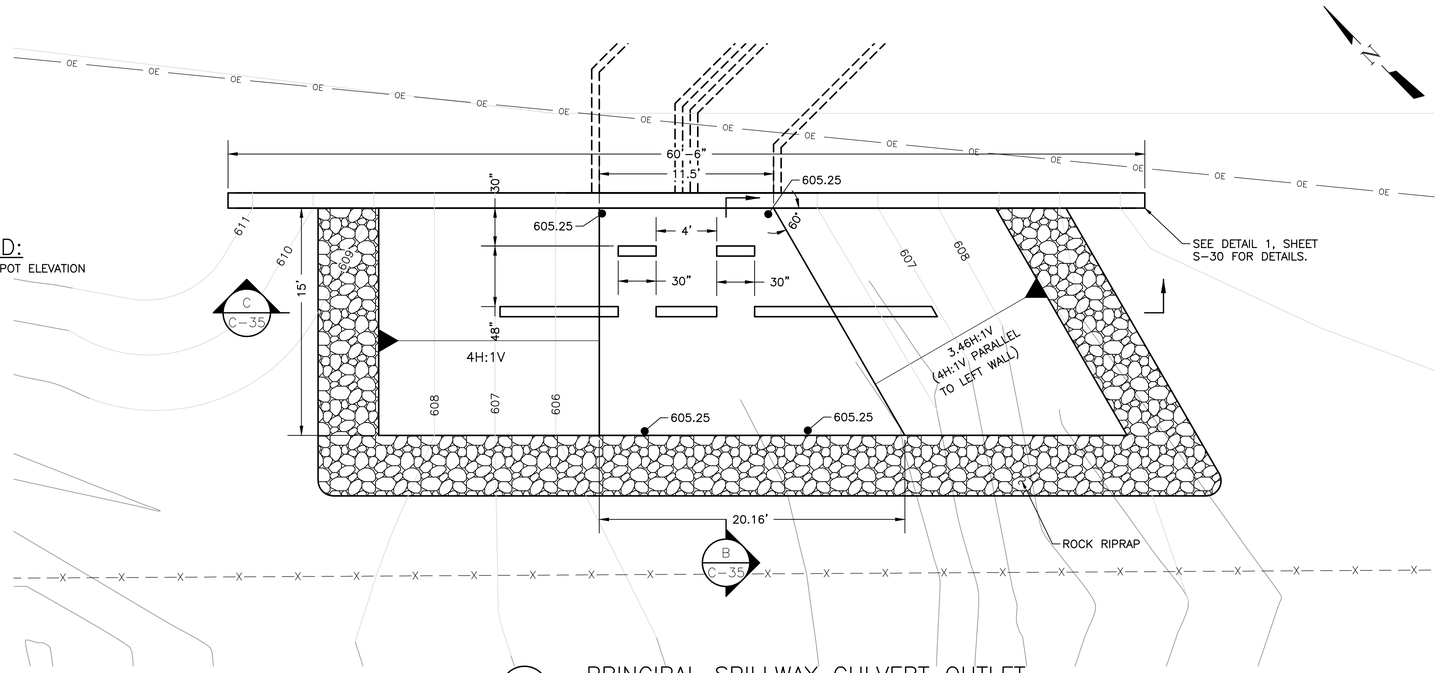

2 C-16 PRINCIPAL SPILLWAY CULVERT OUTLET

0 5' 10'
SCALE IN FEET

LEGEND:
SPOT ELEVATION

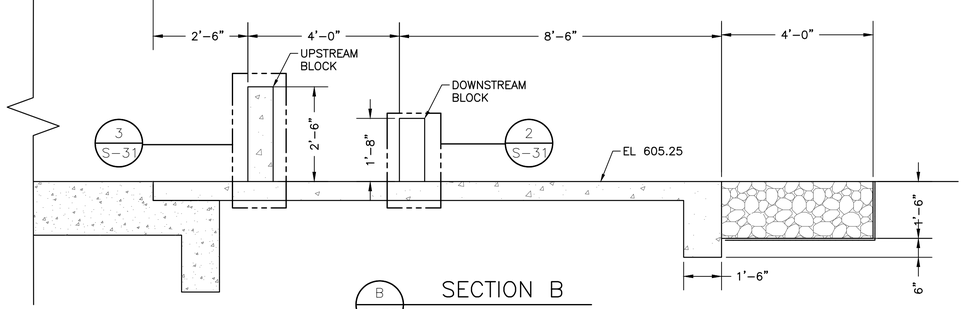

B C-35 SECTION B

0 1' 2' 4'
1/2"=1'-0"

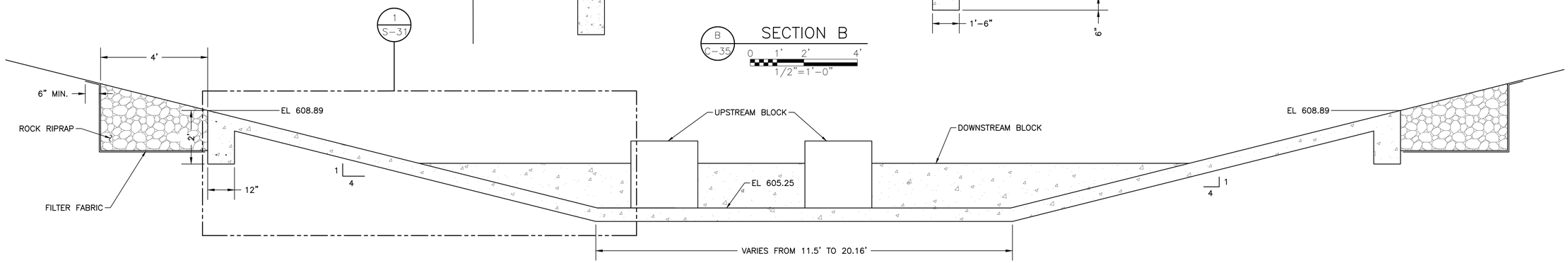

C C-35 SECTION C

0 1' 2' 4'
1/2"=1'-0"

Texas and Nichols, Inc.
Texas Registered Engineering Firm F-2144

STATE OF TEXAS
DUSTIN G. MORTENSEN
100000
LICENSED
PROFESSIONAL ENGINEER
4-23-2015

DESIGNED BY:	JWE
DRAWN BY:	CJG
CHECKED BY:	DGM
FILE NAME:	TX-NRC-XS-CHUTE.dwg
DATE CHECKED:	4/23/2015

PRINCIPAL SPILLWAY CULVERT

FLOODWATER RETARDING STRUCTURE NO. 6 REHABILITATION
PLUM CREEK WATERSHED
OF THE
PLUM CREEK WATER, TEXAS

NRCS
United States Department of Agriculture
Natural Resources Conservation Service

REVISIONS DATE

DRAWING NO.
TX-EN-0650

SHEET
C-35

ACAD Rel: 19.1s (LMS Tech)
Filename: N:\WR\2012 Drawing\TX-NRC-XS-CHUTE.dwg
Last Saved: 4/23/2015 2:12 PM Saved By: 02389

Plot Date: 4/23/2015 2:26 PM Plot By: 02389 Filename: N:\WR\2012 Drawing\TX-NRC-XS-CHUTE.dwg

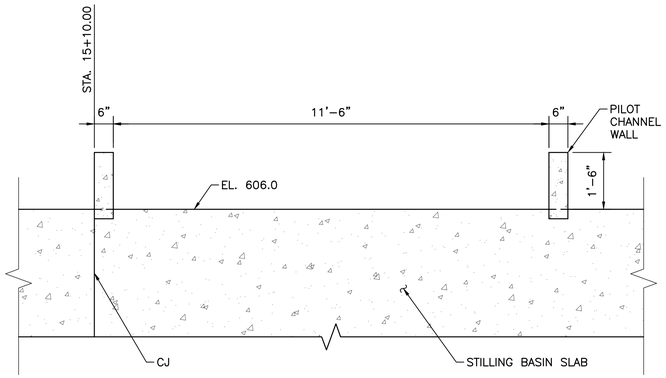

A C-22 PILOT CHANNEL SECTION

0 1' 2' 4'

1/2"=1'-0"

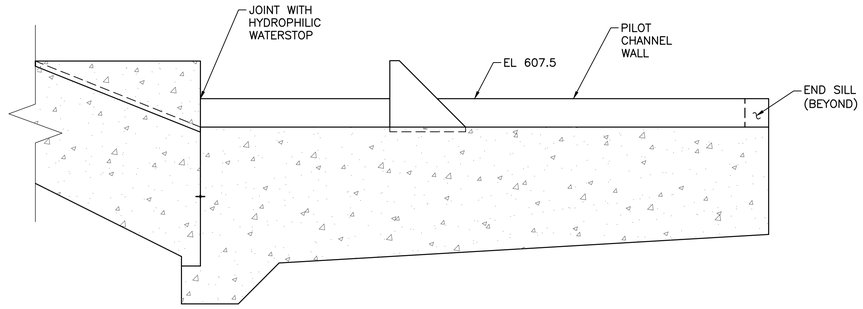

B C-22 SECTION B-B

0 1' 2' 4' 8'

1/4"=1'-0"

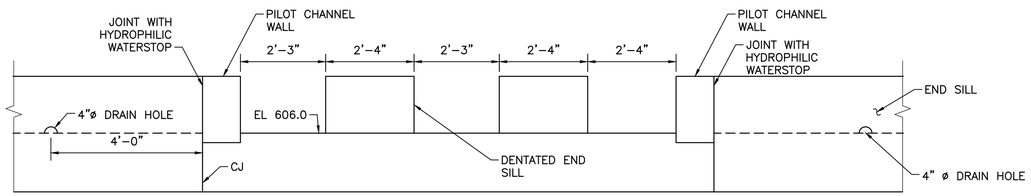

C C-22 SECTION C-C

0 1' 2' 4'

1/2"=1'-0"

Freese and Nichols, Inc.
Texas Registered Engineering Firm F-2144
STATE OF TEXAS
DUSTIN G. MORTENSEN
100000
LICENSED
PROFESSIONAL ENGINEER
4-23-2015

DESIGNED BY: JWE
DRAWN BY: CJG
CHECKED BY: DGM
FILE NAME: TX-NRC-XS-WALL.dwg
DATE CHECKED: 4/22/2015

LABYRINTH WEIR - DETAILS

FLOODWATER RETARDING STRUCTURE NO. 6 REHABILITATION
PLUM CREEK WATERSHED
OF THE
PLUM CREEK WATER, TEXAS

NRCS
United States Department of Agriculture
Natural Resources Conservation Service

REVISIONS DATE

DRAWING NO. TX-EN-0650

SHEET C-36

ACAD Rel: 19.1s (LMS Tech)
Filename: N:\WR\2012 Drawing\TX-NRC-XS-WALL.dwg
Last Saved: 4/13/2015 12:22 PM Saved By: 02389

Plot Date: 4/22/2015 1:47 PM Plot By: 02389 Filename: N:\WR\2012 Drawing\TX-NRC-XS-WALL.dwg

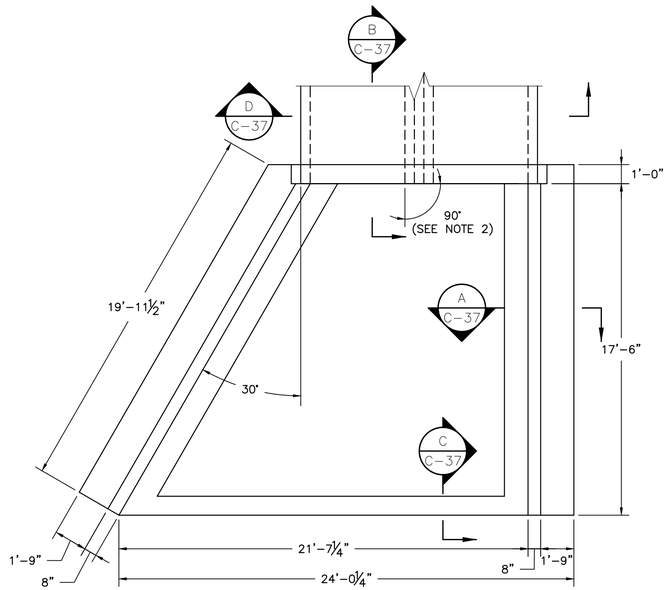

1 HEADWALL PLAN

0 1' 2' 4' 8'

1/4"=1'-0"

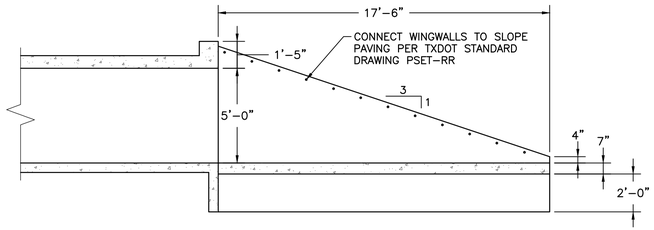

C INSIDE ELEVATION OF WINGWALL

0 1' 2' 4' 8'

1/4"=1'-0"

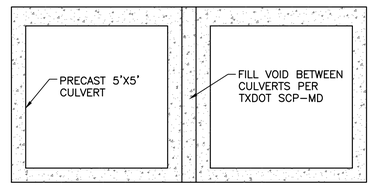

D C-37 CULVERT SECTION

0 1' 2' 4'

3/8"=1'-0

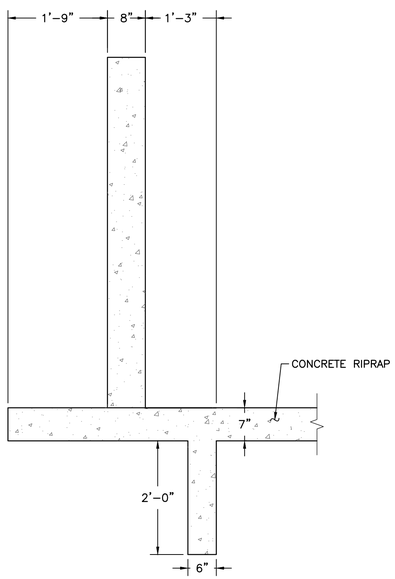

A C-37 TXDOT SECTION A-A WINGWALL SECTION

0 6" 1' 2'

3/4"=1'-0

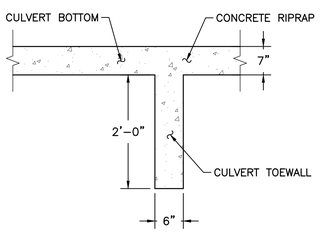

B C-37 TXDOT SECTION B-B CULVERT TOEWALL

0 6" 1' 2'

3/4"=1'-0

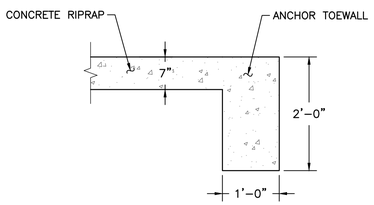

C C-37 TXDOT SECTION C-C ANCHOR TOEWALL SECTION

0 6" 1' 2'

3/4"=1'-0

NOTES:

1. HEADWALL REINFORCEMENT SHOWN ON TXDOT STANDARD DRAWING SETB-FW-S.
2. ADJUST ANGLE OF BARS DS, DL, AND OL.
3. PROVIDE PIPE RUNNERS PER TXDOT STANDARD DRAWING SETB-FW-S.
4. PRECAST CULVERT PER TXDOT SCP-5 FOR FILL HEIGHT LESS THAN 2-FT.
5. CONTINUE TXDOT REINFORCING BARS J2 AND E THROUGH CONCRETE RIPRAP.

Freese and Nichols, Inc.
Texas Registered Engineering Firm F-2144

STATE OF TEXAS
DUSTIN G. MORTENSEN
100000
LICENSED
PROFESSIONAL ENGINEER

Dustin Mortensen 4-23-2015

DESIGNED BY: JWE
DRAWN BY: CJG
CHECKED BY: DGM
FILE NAME: TX-NRC-DT-CHUTE.dwg
DATE CHECKED: 4/22/2015

CULVERT DETAILS

FLOODWATER RETARDING STRUCTURE NO. 6 REHABILITATION
PLUM CREEK WATERSHED
OF THE
PLUM CREEK WATER, TEXAS

NRCS
United States Department of Agriculture
Natural Resources Conservation Service

REVISIONS DATE

DRAWING NO. TX-EN-0650

SHEET C-37

ACAD Rel: 19.1s (LMS Tech)
Filename: N:\WR\2012 Drawing\TX-NRC-DT-CHUTE.dwg
Last Saved: 3/10/2015 8:32 AM Saved By: cjg

Plot Date: 4/22/2015 1:47 PM Plot By: 02389 Filename: N:\WR\2012 Drawing\TX-NRC-DT-CHUTE.dwg

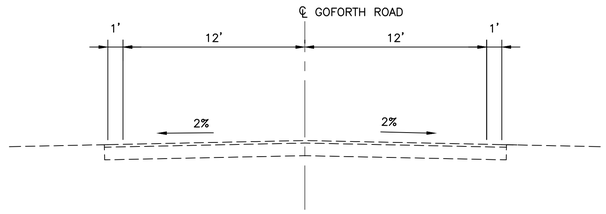

1 — EXISTING TYPICAL ROADWAY SECTION

0 5' 10'
SCALE IN FEET

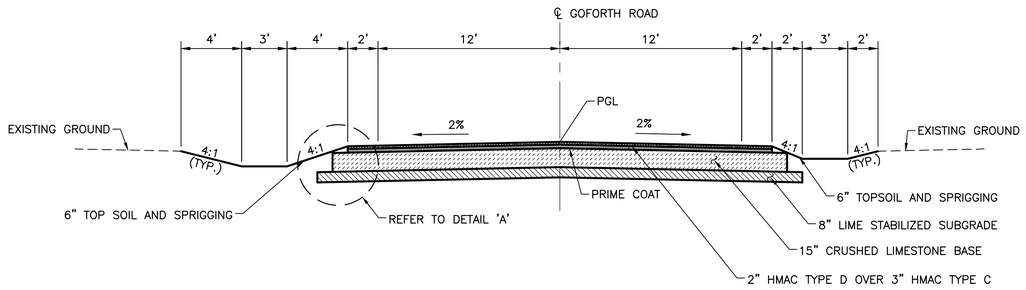

2 — PROPOSED TYPICAL ROADWAY SECTION

0 5' 10'
SCALE IN FEET

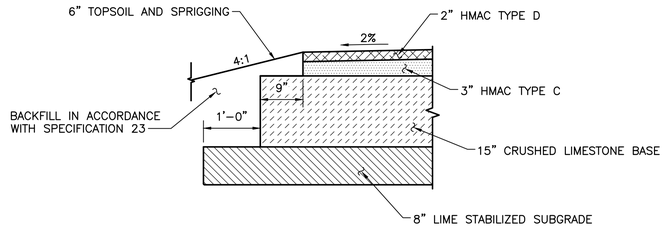

3 — DETAIL 'A' – NO CURB

0 6" 1' 2'
3/4"=1'-0

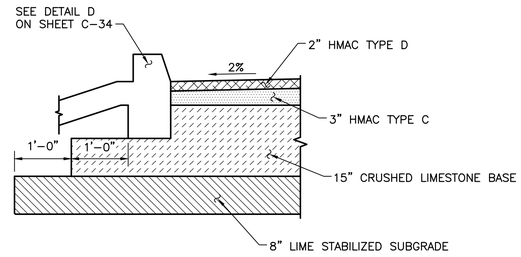

4 — DETAIL 'A' – CURB

0 6" 1' 2'
3/4"=1'-0

Freese and Nichols, Inc.
Texas Registered Engineering Firm F-2144
STATE OF TEXAS
SEAN D. BARRY
114177
LICENSED
PROFESSIONAL ENGINEER
4/22/2015

DESIGNED BY:	SDB
DRAWN BY:	CJG
CHECKED BY:	JNR
FILE NAME:	
DATE CHECKED:	4/22/2015

GOFORTH RD. – TYPICAL ROADWAY SECTIONS

FLOODWATER RETARDING STRUCTURE NO. 6 REHABILITATION
PLUM CREEK WATERSHED
OF THE
PLUM CREEK WATER, TEXAS

NRCS
United States Department of Agriculture
Natural Resources Conservation Service

REVISIONS	DATE

DRAWING NO.
TX-EN-0650

SHEET
C-38

ACAD Rel: 19.1s (LMS Tech)
Filename: N:\WR\2012 Drawing\GOFORTH ROAD\TX-NRC-RW-SECTIONS.dwg
Last Saved: 4/21/2015 1:15 PM Saved By: cjg

Plot Date: 4/22/2015 1:48 PM Plot By: 02389 Filename: N:\WR\2012 Drawing\GOFORTH ROAD\TX-NRC-RW-SECTIONS.dwg

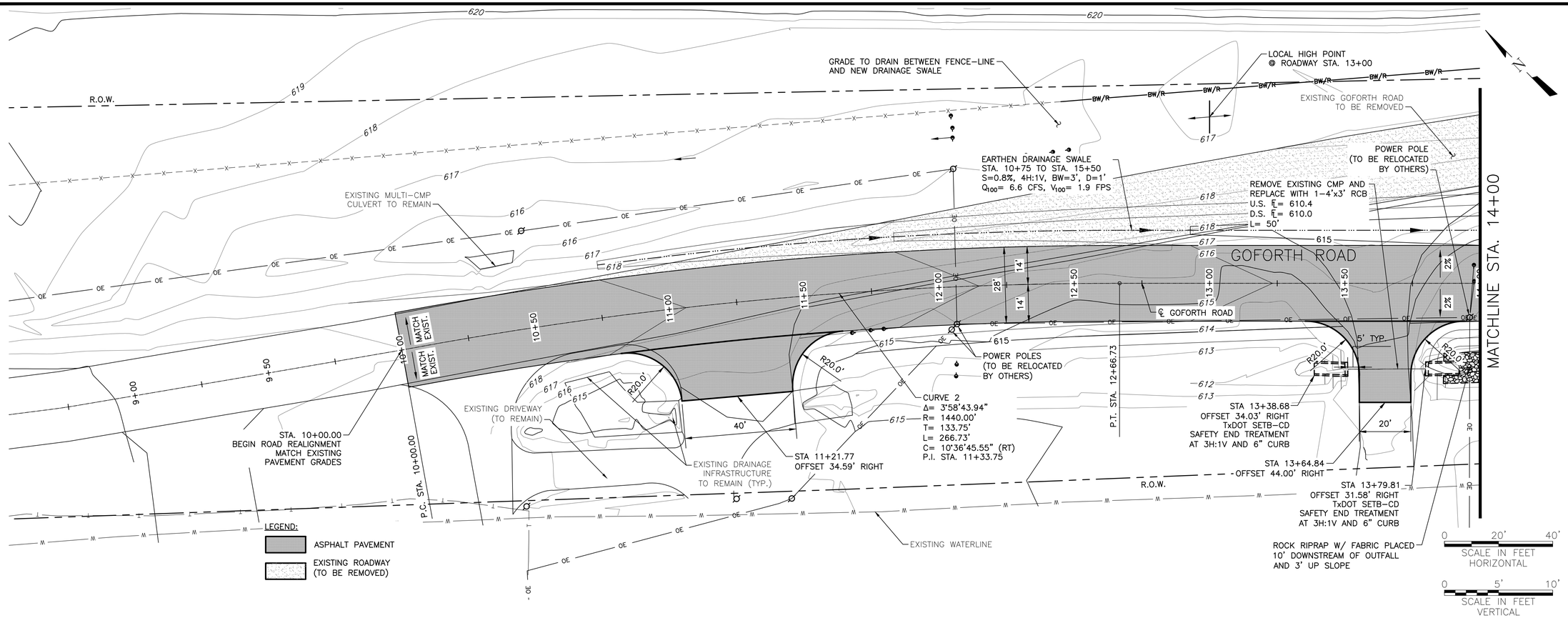

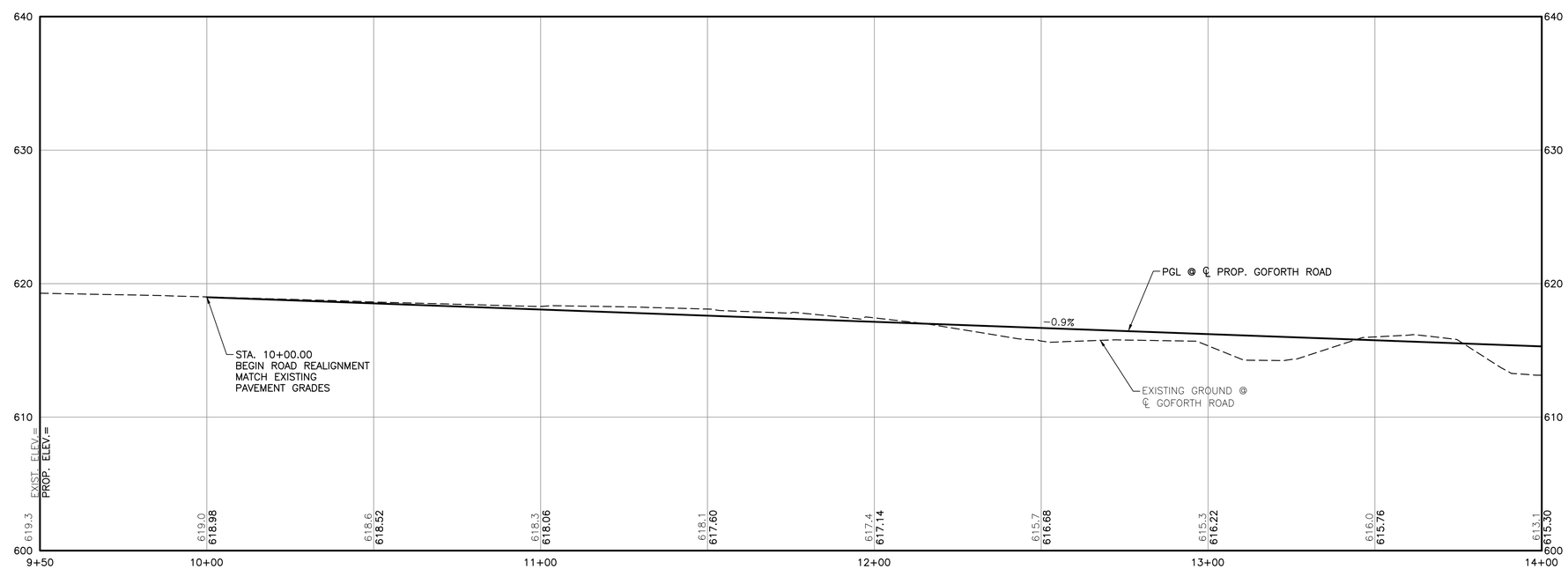

Freese and Nichols, Inc. Texas Registered Engineering Firm F-2144

STATE OF TEXAS SEAN D. BARRY 114177 LICENSED PROFESSIONAL ENGINEER 4/23/2015

DESIGNED BY: SDB
DRAWN BY: CJG
CHECKED BY: JNR
FILE NAME: TX-NRC-RW-PP01.dwg
DATE CHECKED: 4/22/2015

GOFORTH RD. - PLAN AND PROFILE
STA. 8+50 TO 14+00
FLOODWATER RETARDING STRUCTURE NO. 6 REHABILITATION
PLUM CREEK WATERSHED
OF THE
PLUM CREEK WATER, TEXAS

NRCS
United States Department of Agriculture
Natural Resources Conservation Service

REVISIONS DATE

DRAWING NO. TX-EN-0650

SHEET C-39

ACAD Rel 18.2s (LMS Tech) User: DGM
[NRC14285][]N:\WR\2012 DRAWING\GOFORTH ROAD\TX-NRC-RW-PP01.DWG LAYOUT: P&P 1
12/08/2014 11:11:24 A.M. LTS: 1.00 PSLTS: 1 TWIST: 0.0, 44.3, 0.0, 44.3, 0.0, 44.3
4 REFERENCE FILES: N:\STANDARD\2012\TX-NRC-FULL BORDER, N:\WR\2012 BASE\TX-NRC-EX BASE, N:\WR\2012 BASE\TX-NRC-PROP-BASE and N:\WR\2012 BASE\TX-NRC-PROP-ROAD

Plot Date: 4/22/2015 1:49 PM Plot By: 02389 Filename: N:\WR\2012 Drawing\GOFORTH ROAD\TX-NRC-RW-PP01.dwg

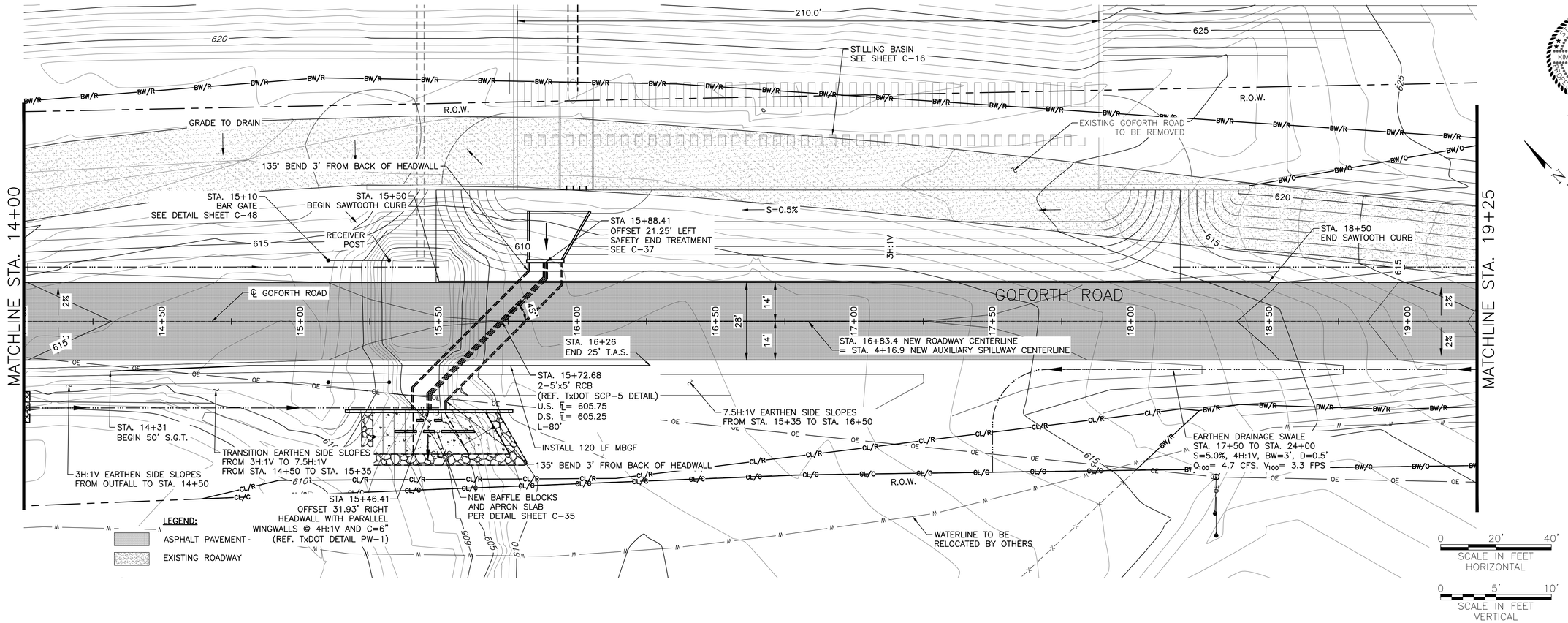

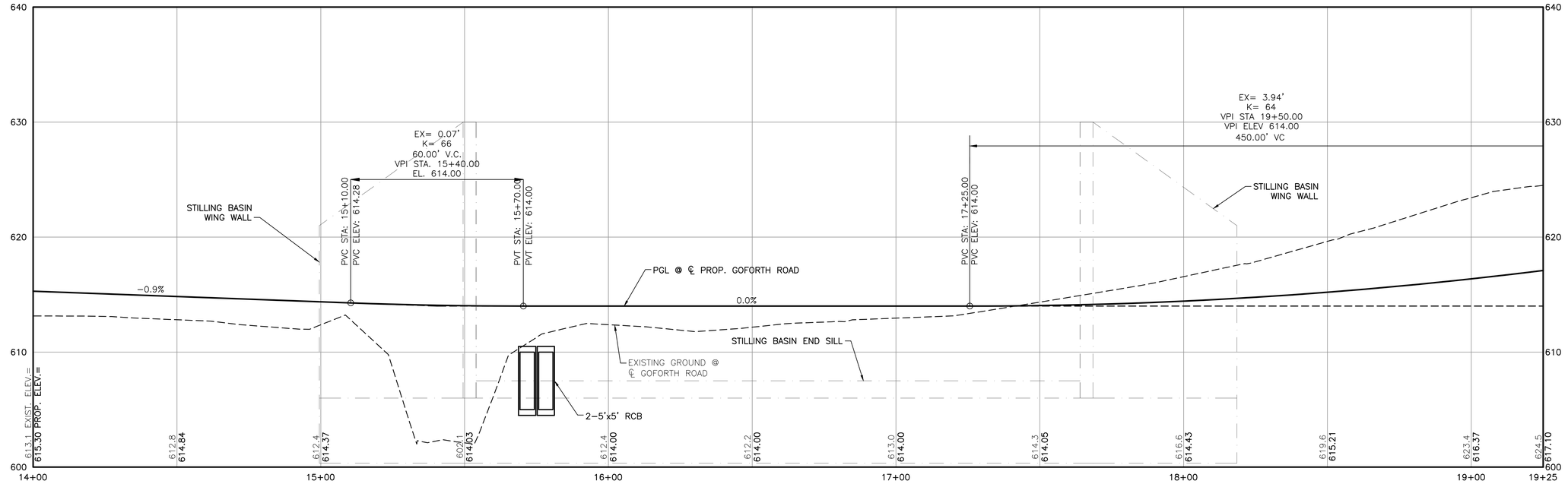

STATE OF TEXAS
KIMBERLY K. PATAK
97367
LICENSED
PROFESSIONAL ENGINEER
4/23/15

STATE OF TEXAS
SEAN D. BARRY
114177
LICENSED
PROFESSIONAL ENGINEER
4/22/2015

Freese and Nichols, Inc.
Texas Registered Engineering Firm F-2144

DESIGNED BY: SDB
DRAWN BY: CJG
CHECKED BY: JNR
FILE NAME: TX-NRC-RW-PP01.dwg
DATE CHECKED: 4/22/2015

GOFORTH RD. - PLAN AND PROFILE
STA. 14+00 TO 19+25

FLOODWATER RETARDING STRUCTURE NO. 6 REHABILITATION
PLUM CREEK WATERSHED
OF THE
PLUM CREEK WATER, TEXAS

United States Department of Agriculture
Natural Resources Conservation Service

REVISIONS	DATE

DRAWING NO.
TX-EN-0650

SHEET
C-40

ACAD Rel: 19.1s (LMS Tech)
Filename: N:\WR\2012 Drawing\GOFORTH ROAD\TX-NRC-RW-PP01.dwg
Last Saved: 4/21/2015 1:26 PM Saved By: cjg

Plot Date: 4/22/2015 1:49 PM Plot By: 02389 Filename: N:\WR\2012 Drawing\GOFORTH ROAD\TX-NRC-RW-PP01.dwg

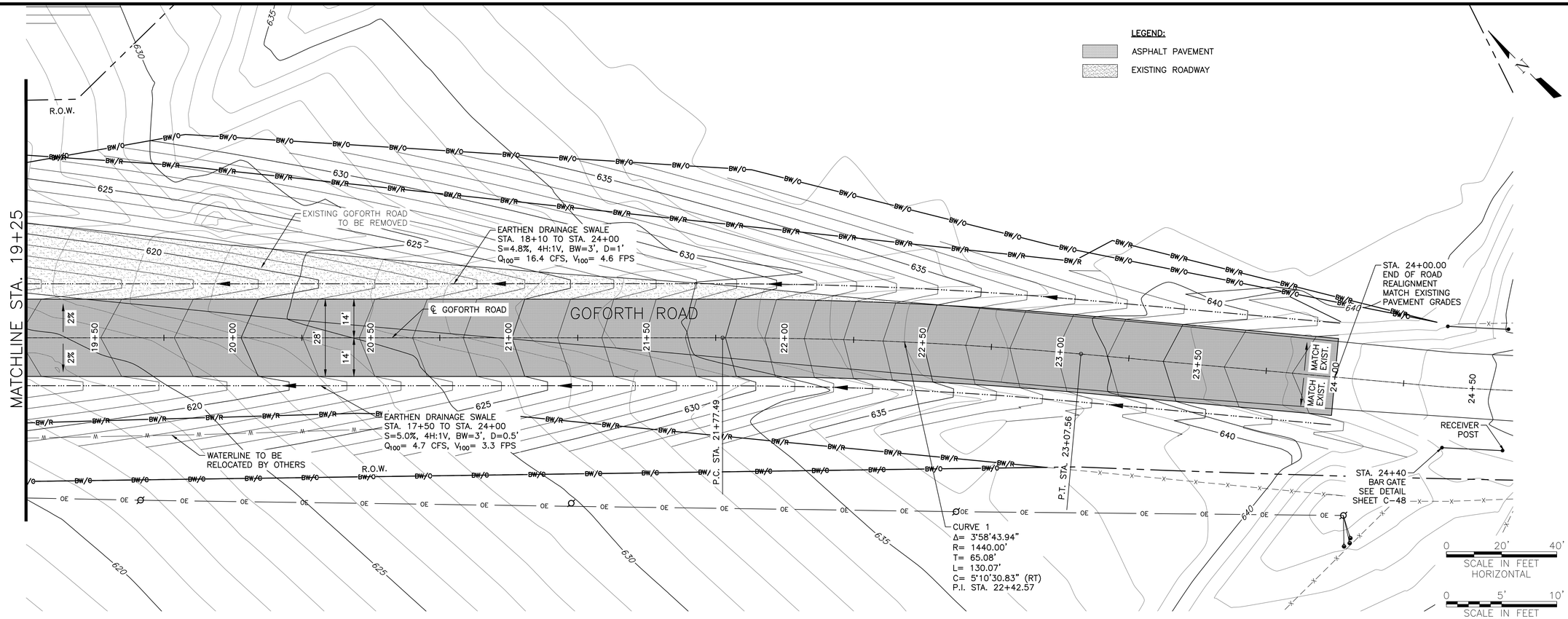

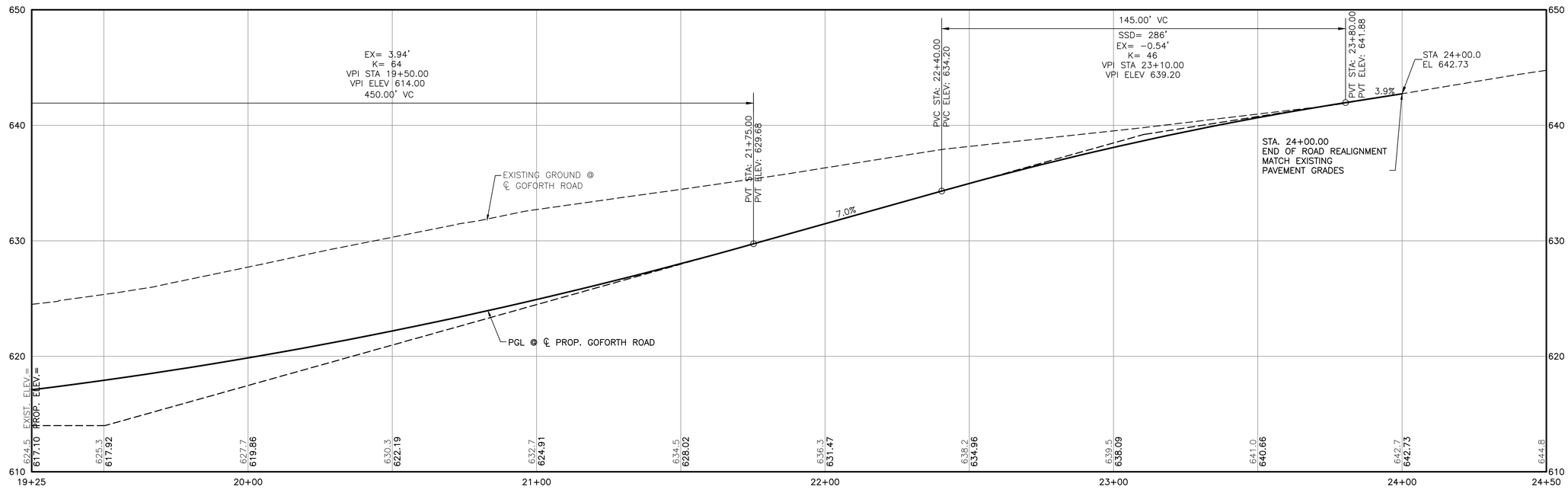

Freese and Nichols, Inc.
Texas Registered Engineering Firm F-2144
STATE OF TEXAS
SEAN D. BARRY
114177
LICENSED
PROFESSIONAL ENGINEER
4/22/2015

DESIGNED BY: SDB
DRAWN BY: CJG
CHECKED BY: JNR
FILE NAME: TX-NRC-RW-PP01.dwg
DATE CHECKED: 4/22/2015

GOFORTH RD. – PLAN AND PROFILE STA. 19+25 TO END

FLOODWATER RETARDING STRUCTURE NO. 6 REHABILITATION
PLUM CREEK WATERSHED
OF THE
PLUM CREEK WATER, TEXAS

United States Department of Agriculture
Natural Resources Conservation Service

REVISIONS DATE

DRAWING NO. TX-EN-0650

SHEET C-41

ACAD Rel: 19.1s (LMS Tech)
Filename: N:\WR\2012 Drawing\GOFORTH ROAD\TX-NRC-RW-PP01.dwg
Last Saved: 4/21/2015 1:26 PM Saved By: cjg
Plot Date: 4/22/2015 1:49 PM Plot By: 02389 Filename: N:\WR\2012 Drawing\GOFORTH ROAD\TX-NRC-RW-PP01.dwg

BM3

PC: 8+69.19
PT: 8+77.53
PC: 8+88.89
PT: 8+88.95
PC: 9+35.51
PT: 9+36.07
9+00
9+50
10+00.00 PC:
10+00
10+50
11+00
11+50
12+00
12+50
PT: 12+66.72
13+00
13+50
GOFORTH RD.
2'
12'

INSTALL
OM ASSM (OM-2X)(WC) GND

4" DOUBLE YELLOW SOLID STRIPING
TYPE I & II WITH TYPE II-A-A
RAISED PAVEMENT MARKERS
AT 80' C-C

4" WHITE SOLID STRIPING

STA 10+00.00
BEGIN NEW PAVEMENT MARKINGS
MATCH EXISTING DOUBLE YELLOW CENTERLINE

INSTALL
OM ASSM (OM-2X)(WC) GND

MATCHLINE STA. 14+00

N

0 20' 40'
SCALE IN FEET
HORIZONTAL

MATCHLINE STA. 14+00
14+50
15+00
15+50
16+00
16+50
17+00
17+50
18+00
18+50
19+00
GOFORTH RD.
MATCHLINE STA. 19+25

INSTALL
OM ASSM (OM-2X)(WC) GND

INSTALL
DEL ASSM (D-SW) SZ (WC) GND
AT 100' SPACING

INSTALL
OM ASSM (OM-2X)(WC) GND

4" DOUBLE YELLOW SOLID STRIPING
TYPE I & II WITH TYPE II-A-A
RAISED PAVEMENT MARKERS
AT 80' C-C

4" WHITE SOLID STRIPING

SPEED LIMIT 40
R2-1
24"x30"
STA. 16+00

N

0 20' 40'
SCALE IN FEET
HORIZONTAL

MATCHLINE STA. 19+25
19+50
20+00
20+50
21+00
21+50
22+00
22+50
23+00
23+50
24+00
24+50
GOFORTH RD.
PC: 21+77.49
PT: 23+07.56
PC: 24+37.75
PT: 24+46.14

4" DOUBLE YELLOW SOLID STRIPING
TYPE I & II WITH TYPE II-A-A
RAISED PAVEMENT MARKERS
AT 80' C-C

4" WHITE SOLID STRIPING

STOP
FOR
SCHOOL BUS
LOADING OR
UNLOADING
R19-1T
48"x60"
STA. 23+50

STA 24+00.00
END NEW PAVEMENT MARKINGS
MATCH EXISTING DOUBLE YELLOW CENTERLINE

N

0 20' 40'
SCALE IN FEET
HORIZONTAL

Freese and Nichols, Inc.
Texas Registered Engineering Firm F-2144

STATE OF TEXAS
SEAN D. BARRY
114177
LICENSED
PROFESSIONAL ENGINEER
4/22/2015

DESIGNED BY:	SDB
DRAWN BY:	CJG
CHECKED BY:	JNR
FILE NAME:	TX-NRC-RW-SS01.dwg
DATE CHECKED:	4/22/2015

GOFORTH RD. - SIGNING AND STRIPING

FLOODWATER RETARDING STRUCTURE NO. 6 REHABILITATION
PLUM CREEK WATERSHED
OF THE
PLUM CREEK WATER, TEXAS

NRCS
United States Department of Agriculture
Natural Resources Conservation Service

REVISIONS	DATE

DRAWING NO.
TX-EN-0650

SHEET
C-42

ACAD Rel: 19.1s (LMS Tech)
Filename: N:\WR\2012 Drawing\GOFORTH ROAD\TX-NRC-RW-SS01.dwg
Last Saved: 4/21/2015 1:27 PM Saved By: cjg

Plot Date: 4/22/2015 1:50 PM Plot By: 02389 Filename: N:\WR\2012 Drawing\GOFORTH ROAD\TX-NRC-RW-SS01.dwg

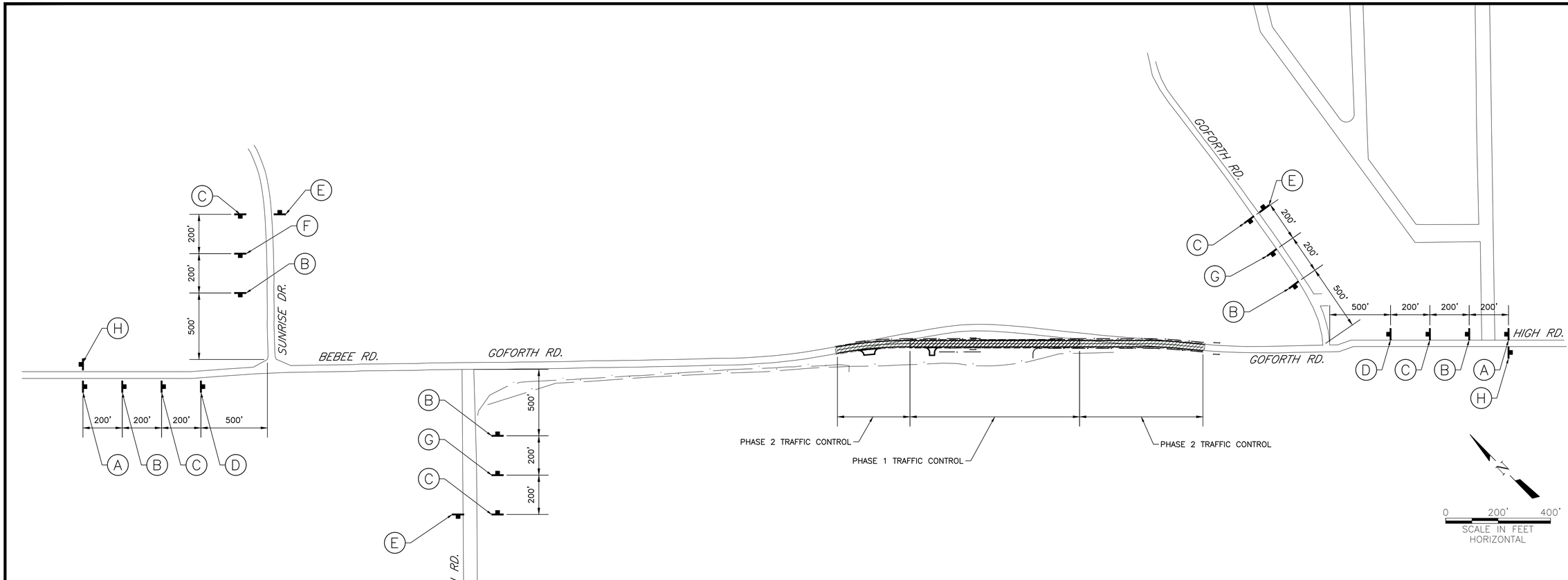

SUGGESTED SEQUENCE OF CONSTRUCTION NOTE:

PHASE 1

MAINTAIN TWO-WAY TRAFFIC ON EXISTING GOFORTH ROAD. CONSTRUCT NEW ROADWAY BETWEEN STA. 12+80 AND 19+30.

PHASE 2

CLOSE GOFORTH ROAD BETWEEN BEBEE ROAD AND HIGH ROAD. MAINTAIN LOCAL TRAFFIC TO ACCESS ALL DRIVEWAYS. CONSTRUCT REMAINDER OF NEW RAODWAY.

NOTE:

CONTRACTOR SHALL MAINTAIN ALL ADVANCE WARNING TRAFFIC CONTROL SIGNAGE FOR THE COMPLETE CONSTRUCTION DURATION OF GOFORTH ROAD.

GENERAL NOTES FOR TRAFFIC CONTROL:

1. ROAD CLOSURES SHALL BE LIMITED TO WORK AREAS ONLY.
2. ALL WORK SHALL START AFTER 6:00 A.M. AND WORK SHALL BE SCHEDULED SO THAT NO WORK IS PERFORMED AFTER 8:00 P.M.
3. MESSAGE BOARDS SHALL BE USED PRIOR TO ANY CHANGES IN TRAFFIC PATTERNS AS DIRECTED BY THE ENGINEER. THE CONTRACTOR SHALL PROVIDE THE ENGINEER TWO WEEKS NOTICE PRIOR TO MAJOR TRAFFIC CHANGES IN ORDER TO NOTIFY THE MEDIA.
4. ALL EXCAVATIONS SHALL BE BACKFILLED AND COMPACTED IN ACCORDANCE WITH THE PLANS AND SPECIFICATIONS AND SHALL BE OPEN TO TRAFFIC IN ACCORDANCE WITH THE PROJECT SPECIFICATIONS AND TRAFFIC CONTROL PLAN.
5. CONTRACTOR SHALL PROVIDE CONTINUOUS ACCESS TO ALL BUSINESS AND RESIDENTIAL DRIVEWAYS DURING THE CONSTRUCTION PERIOD.
6. ALL WORK ACTIVITIES SHALL BE IN ACCORDANCE WITH THE PROJECT'S TRAFFIC CONTROL PLAN. NO WORK SHALL BE PERFORMED OUT OF SEQUENCE UNLESS AUTHORIZED BY COUNTY REPRESENTATIVE.
7. TRAFFIC SIGNS, SIGN SPACING, SIGN LOCATIONS, TAPER LENGTHS, TRANSITION LENGTHS, AND ALL TRAFFIC CONTROL DEVICES SHALL BE IN STRICT ACCORDANCE WITH THE PROJECT'S TRAFFIC CONTROL PLAN AND SHALL ALSO COMPLY WITH THE LATEST EDITION "TEXAS MANUAL ON UNIFORM TRAFFIC CONTROL DEVICES" AND CURRENT REVISIONS. ANY DISCREPANCIES BETWEEN THE TRAFFIC CONTROL PLAN AND THE TEXAS M.U.T.C.D. SHALL BE IMMEDIATELY BROUGHT TO THE ATTENTION OF THE ENGINEER. IF A DISCREPANCY BETWEEN THE TRAFFIC CONTROL PLAN AND THE TEXAS M.U.T.C.D. IS DISCOVERED, THE TEXAS M.U.T.C.D. SHALL GOVERN.
8. THE CONTRACTOR IS RESPONSIBLE FOR PROVIDING AND MAINTAINING ALL TRAFFIC CONTROL DEVICES FOR THE COMPLETE DURATION OF PROJECT. ANY TRAFFIC CONTROL DEVICES DEEMED UNSATISFACTORY BY THE ENGINEER SHALL BE REPLACED WITHIN 24 HOURS AT CONTRACTOR'S EXPENSE.
9. THE CONTRACTOR SHALL INSTALL AND MAINTAIN A 4' HIGH BARRIER FENCE AROUND ALL OPEN TRENCHES OR EXCAVATED AREAS. SAFETY BARRICADE FENCING SHALL BE HIGH DENSITY POLYETHYLENE TENSAR-UX4050 9SB-ORANGE-4' HIGH). THIS FENCING WILL NOT BE PAID FOR SEPARATELY BUT SHALL BE CONSIDERED SUBSIDIARY TO THE TRAFFIC CONTROL BID ITEM.
10. DURING NON-WORKING HOURS, CONTRACTOR WILL BE REQUIRED TO PROVIDE A 3:1 OR FLATTER SLOPE WHERE VERTICAL CUT EXISTS ADJACENT TO EDGE OF PAVEMENT. MATERIAL USED FOR SLOPE PROTECTION WILL BE SUBSIDIARY TO VARIOUS BID ITEMS OF THIS CONTRACT.
11. BARRICADES, SIGNS, CHANNELIZING DEVICES AND OTHER TRAFFIC CONTROL DEVICES MAY BE ADJUSTED TO FIT FIELD CONDITIONS AS DIRECTED BY THE ENGINEER.
12. EQUIPMENT AND MATERIALS SHALL NOT BE STORED IN PUBLIC RIGHT-OF-WAY AT ANY TIME DURING THE COURSE OF CONSTRUCTION. ANY MATERIAL OR EQUIPMENT APPROVED BY THE ENGINEER FOR TEMPORARY PLACEMENT IN PUBLIC RIGHT-OF-WAY SHALL BE ADEQUATELY BARRICADED WITH TYPE II BARRICADES ON EACH DIRECTION OF TRAVEL.
13. THE CONTRACTOR SHALL MAINTAIN ALL REGULATORY SIGNS DURING THE CONSTRUCTION PERIOD.
14. ALL CONSTRUCTION WARNING SIGNS MAY BE GROUND MOUNTED OR ENGINEER APPROVED PORTABLE MOUNTING DEVICES.
15. CONTRACTOR SHALL NOTIFY THE HAYS COUNTY TRANSPORTATION DEPARTMENT IMMEDIATELY AT (512)-393-7385 IN THE EVENT THAT ANY STREET SIGN, SIGN POST OR SIGN FOUNDATION IS DAMAGED DURING CONSTRUCTION.
16. THE CONTRACTOR SHALL MAINTAIN AND PROVIDE SUITABLE TEMPORARY DRAINAGE MEASURES THROUGHOUT THE PROJECT SITE INCLUDING TEMPORARY DETOURS TO ENSURE POSITIVE DRAINAGE UNTIL SUCH TIME THAT PERMANENT DRAINAGE STRUCTURES ARE COMPLETE AND OPERATIONAL. THE COST ASSOCIATED WITH CONSTRUCTING/MAINTAINING TEMPORARY DRAINAGE IMPROVEMENTS WILL NOT BE PAID FOR SEPARATELY BUT SHALL BE CONSIDERED SUBSIDIARY TO THE TRAFFIC CONTROL BID ITEM.
17. CONTRACTOR SHALL NOTIFY THE HAYS COUNTY TRANSPORTATION DEPARTMENT AT LEAST 48 HOURS PRIOR TO MAKING ANY LANE CHANGES OR LANE CLOSURES.

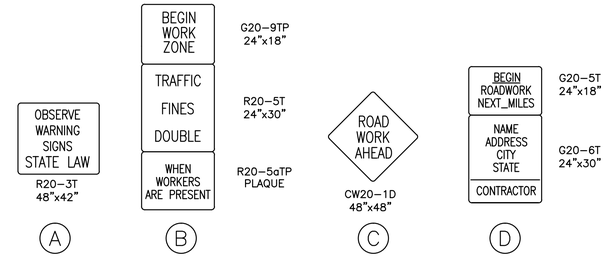

Freese and Nichols, Inc.
Texas Registered Engineering Firm F-2144
STATE OF TEXAS
SEAN D. BARRY
114177
LICENSED
PROFESSIONAL ENGINEER
4/8/2015

DESIGNED BY: SDB
DRAWN BY: CJG
CHECKED BY: JNR
FILE NAME: TX-NRC-RW-AWS01.dwg
DATE CHECKED: 4/22/2015

GOFORTH RD. – TRAFFIC CONTROL
ADVANCED WARNING SIGNS

FLOODWATER RETARDING STRUCTURE NO. 6 REHABILITATION
PLUM CREEK WATERSHED
OF THE
PLUM CREEK WATER, TEXAS

NRCS
United States Department of Agriculture
Natural Resources Conservation Service

REVISIONS	DATE

DRAWING NO.
TX-EN-0650

SHEET
C-43

ACAD Rel: 19.1s (LMS Tech)
Filename: N:\WR\2012 Drawing\GOFORTH ROAD\TX-NRC-RW-AWS01.dwg
Last Saved: 4/21/2015 1:28 PM Saved By: cjg

Plot Date: 4/22/2015 1:50 PM Plot By: 02389 Filename: N:\WR\2012 Drawing\GOFORTH ROAD\TX-NRC-RW-AWS01.dwg

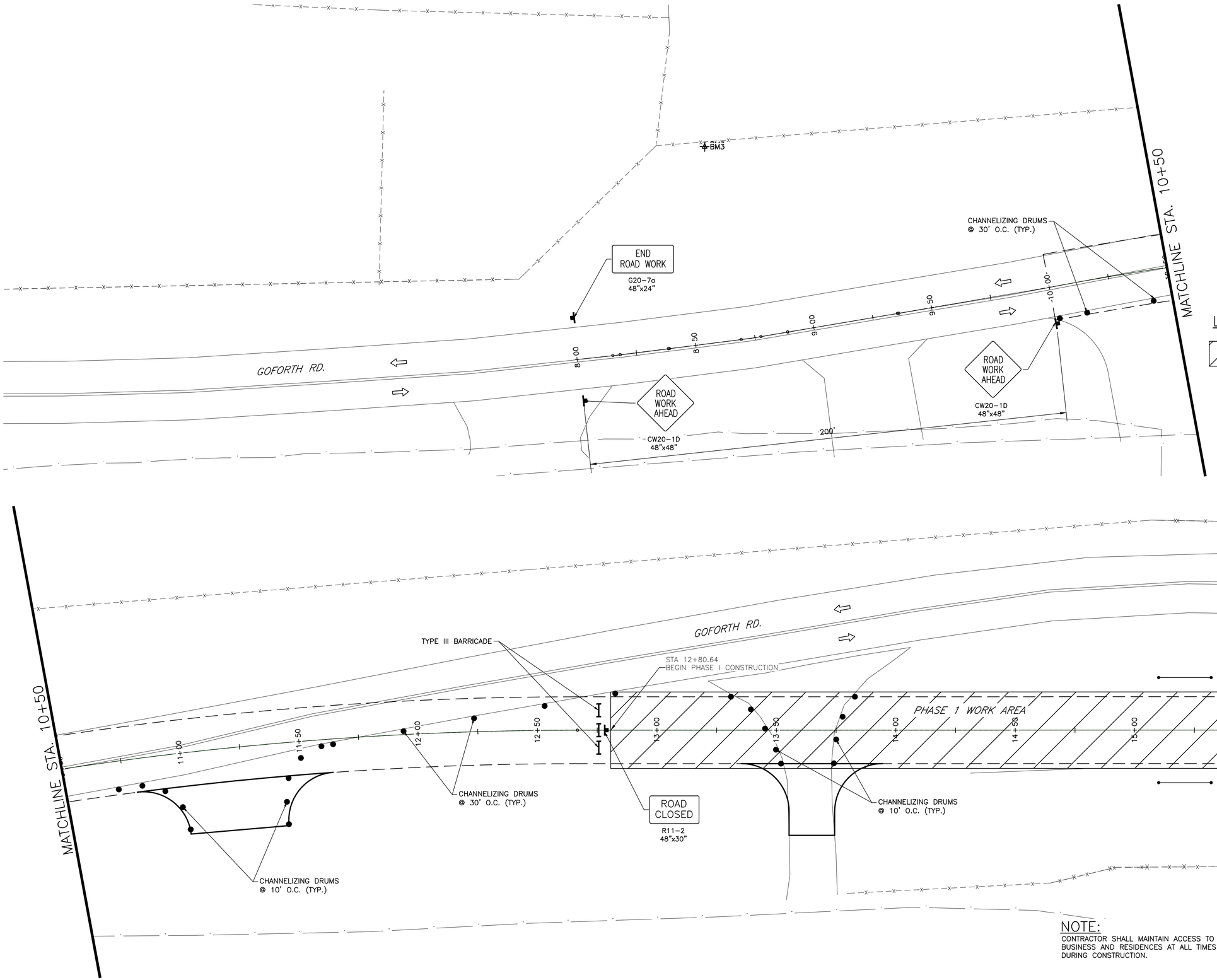

NOTE:
CONTRACTOR SHALL MAINTAIN ACCESS TO ALL BUSINESS AND RESIDENCES AT ALL TIMES DURING CONSTRUCTION.

Freese and Nichols, Inc.
Texas Registered Engineering Firm F-2144

STATE OF TEXAS
SEAN D. BARRY
114177
LICENSED
PROFESSIONAL
ENGINEER
4/22/2015

DESIGNED BY:	SDB
DRAWN BY:	CJG
CHECKED BY:	JNR
FILE NAME:	TX-NRC-RW-TRF01.dwg
DATE CHECKED:	4/22/2015

GOFORTH RD. – TRAFFIC CONTROL PLAN – PHASE 1

FLOODWATER RETARDING STRUCTURE NO. 6 REHABILITATION
PLUM CREEK WATERSHED
OF THE
PLUM CREEK WATER, TEXAS

United States Department of Agriculture
Natural Resources Conservation Service

REVISIONS	DATE

DRAWING NO.
TX-EN-0650

SHEET
C-44

ACAD Rel: 19.1s (LMS Tech)
Filename: N:\WR\2012 Drawing\GOFORTH ROAD\TX-NRC-RW-TRF01.dwg
Last Saved: 4/21/2015 1:29 PM Saved By: cjg

Plot Date: 4/22/2015 1:50 PM Plot By: 02389 Filename: N:\WR\2012 Drawing\GOFORTH ROAD\TX-NRC-RW-TRF01.dwg

Freese and Nichols, Inc.
Texas Registered Engineering Firm F-2144

STATE OF TEXAS
SEAN D. BARRY
114177
LICENSED
PROFESSIONAL ENGINEER
4/22/2015

DESIGNED BY:	SDB
DRAWN BY:	CJG
CHECKED BY:	JNR
FILE NAME:	TX-NRC-RW-TRF01.dwg
DATE CHECKED:	4/22/2015

GOFORTH RD. – TRAFFIC CONTROL PLAN – PHASE 1

FLOODWATER RETARDING STRUCTURE NO. 6 REHABILITATION
PLUM CREEK WATERSHED
OF THE
PLUM CREEK WATER, TEXAS

United States Department of Agriculture
Natural Resources Conservation Service

REVISIONS	DATE

DRAWING NO.
TX-EN-0650

SHEET
C-45

ACAD Rel: 19.1s (LMS Tech)
Filename: N:\WR\2012 Drawing\GOFORTH ROAD\TX-NRC-RW-TRF01.dwg
Last Saved: 4/21/2015 1:29 PM Saved By: cjg

Plot Date: 4/22/2015 1:51 PM Plot By: 02389 Filename: N:\WR\2012 Drawing\GOFORTH ROAD\TX-NRC-RW-TRF01.dwg

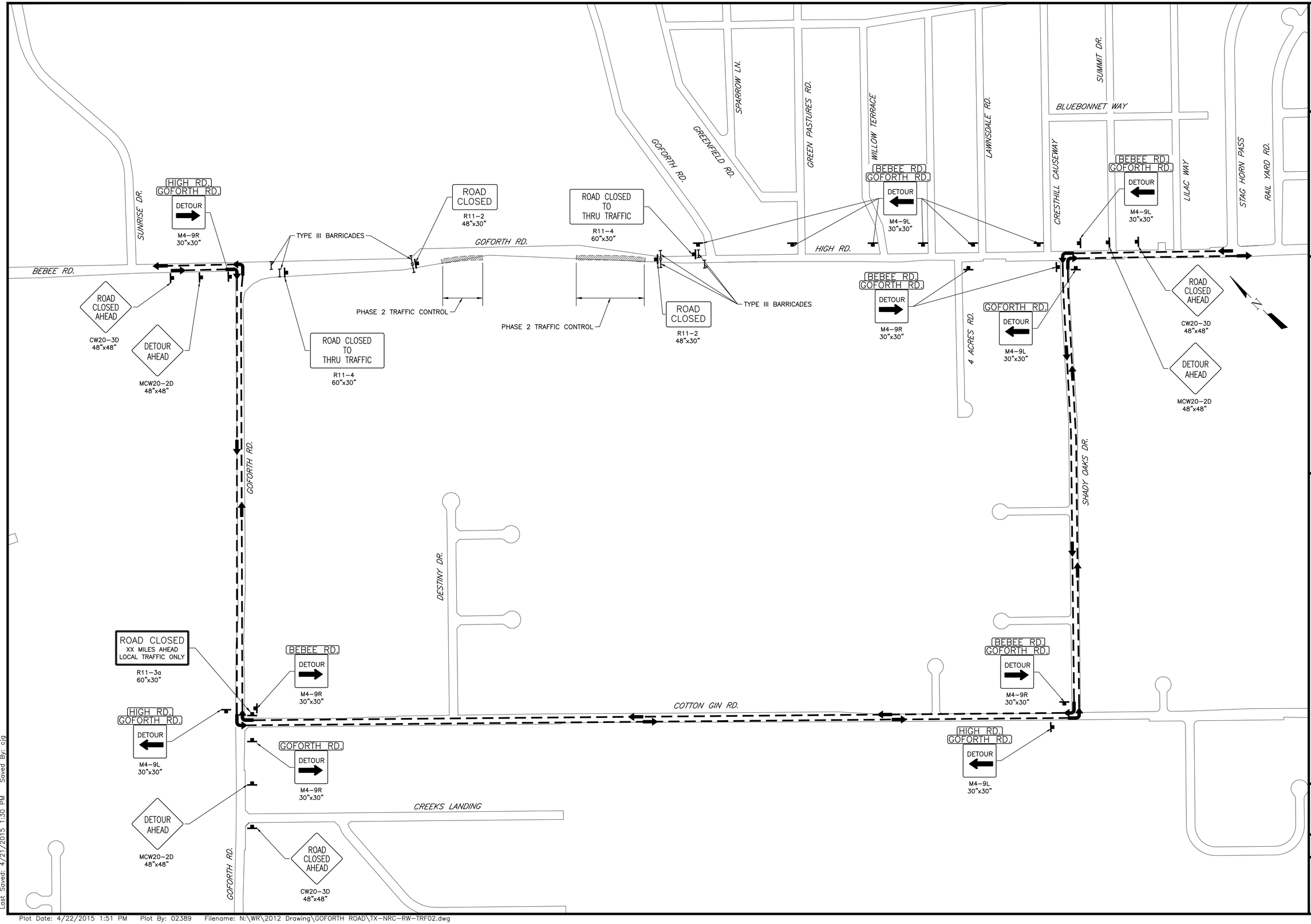

Prepared by:
Freese and Nichols, Inc.
Texas Registered Engineering Firm F-2144

STATE OF TEXAS
SEAN D. BARRY
114177
LICENSED
PROFESSIONAL ENGINEER
4/8/2015

DESIGNED BY:	SDB
DRAWN BY:	CJG
CHECKED BY:	JNR
FILE NAME:	TX-NRC-RW-TRF02.dwg
DATE CHECKED:	4/22/2015

GOFORTH RD. – TRAFFIC CONTROL PLAN AND DETOUR ROUTING PHASE 2

FLOODWATER RETARDING STRUCTURE NO. 6 REHABILITATION
PLUM CREEK WATERSHED
OF THE
PLUM CREEK WATER, TEXAS

United States Department of Agriculture
Natural Resources Conservation Service

REVISIONS	DATE

DRAWING NO.
TX-EN-0650

SHEET
C-46

ACAD Rel: 19.1s (LMS Tech)
Filename: N:\WR\2012 Drawing\GOFORTH ROAD\TX-NRC-RW-TRF02.dwg
Last Saved: 4/21/2015 1:30 PM Saved By: cjg

Plot Date: 4/22/2015 1:51 PM Plot By: 02389 Filename: N:\WR\2012 Drawing\GOFORTH ROAD\TX-NRC-RW-TRF02.dwg

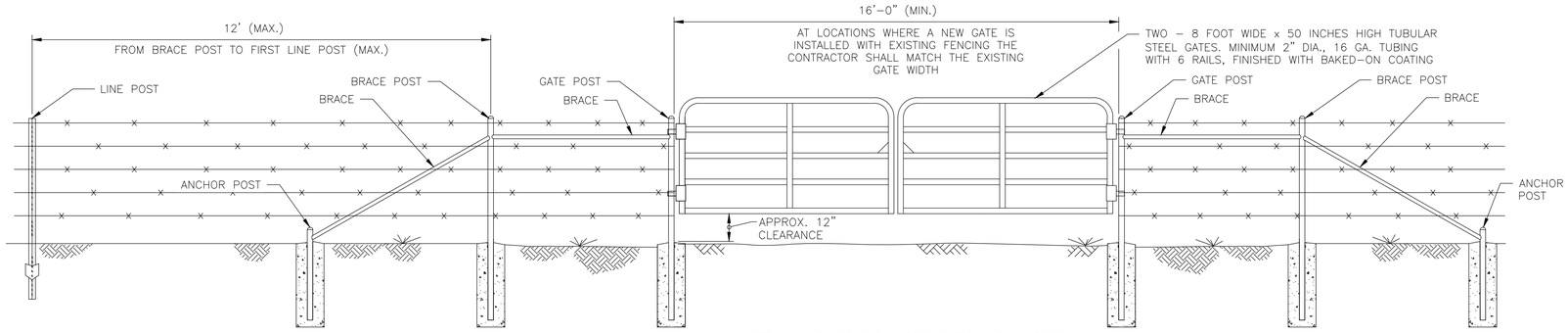

NOTE: IN LIEU OF TWO 8-FOOT GATES ONE 16-FOOT WIDE GATE MAY BE USED.

16' GATE OPENING

NOT TO SCALE

(8 OPENINGS REQUIRED COORDINATE LOCATION WITH CONSTRUCTION OFFICE)

STEEL LINE POST SHALL MEET THE REQUIREMENTS OF ASTM A702 WITH TWO COATS OF PAINT. ALL LINE POST SHALL BE THE SAME COLOR.

PIPE POSTS AND BRACES SHALL MEET THE REQUIREMENTS OF ASTM A500 OR ASTM A53, EXCEPT SECTION B, HYDROSTATIC TEST SHALL NOT APPLY.

GATE AND CORNER POSTS SHALL BE 3" NPS, BRACE POSTS, ANCHOR POSTS, AND BRACES SHALL BE MIN. 2 ½" NPS. ALL POSTS AND BRACES SHALL BE SCHEDULE 40 PIPE.

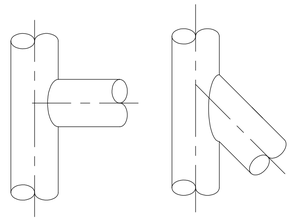

POST DETAILS

NOT TO SCALE

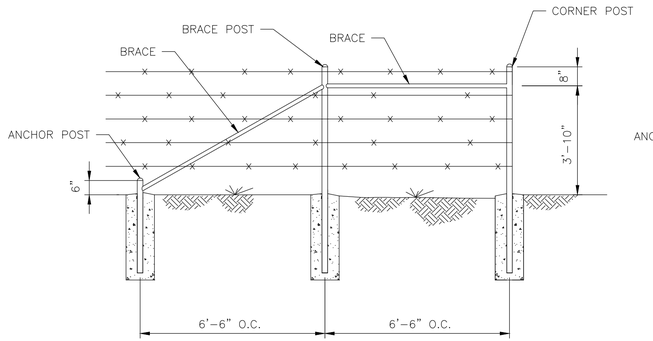

CORNER PANEL

NOT TO SCALE

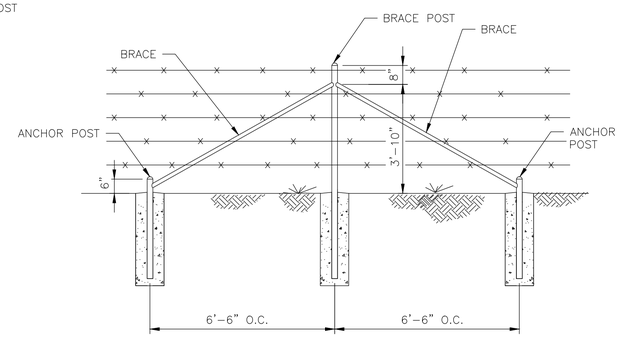

PULL PANEL

NOT TO SCALE

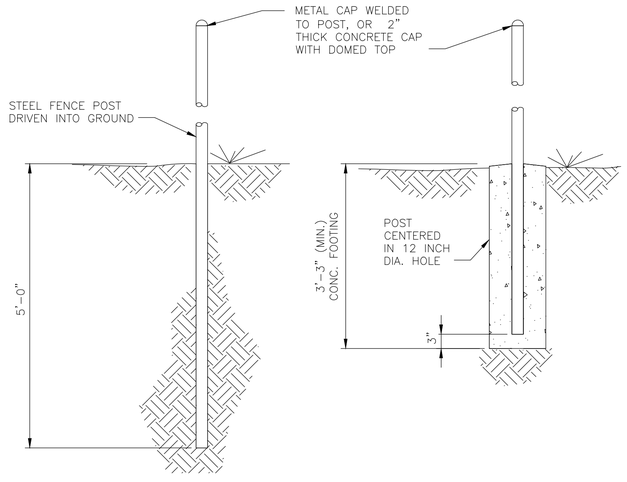

POST CAP & EMBEDMENT DETAIL

NOT TO SCALE

POST CAP & EMBEDMENT CONCRETE FOOTING TYPE DETAIL

NOT TO SCALE

NOTES:

SET STEEL CORNER, BRACE, AND GATE POST IN CONCRETE AS DETAILED ABOVE.

IF SOUND ROCK IS ENCOUNTERED THE DRILL HOLE MAY BE A MINIMUM OF 6" IN DIAMETER

UNLESS OTHERWISE STATED OR APPROVED THE CONCRETE FOR THE FOOTING SHALL HAVE A MINIMUM STRENGTH OF 4,000 psi AT 28 DAYS.

AT CHANGES IN VERTICAL ALIGNMENT, SUCH AS CROSSING OF STUB DIVERSIONS, LINE POSTS OR PULL PANEL POSTS THAT RESTRAIN UPWARD PULL OF THE FENCE STRANDS SHALL BE ANCHORED BY SETTING SUCH POST IN 18" OF CONCRETE. THE ENGINEER WILL DESIGNATE THE LOCATIONS WHERE THIS ANCHORAGE TREATMENT IS REQUIRED.

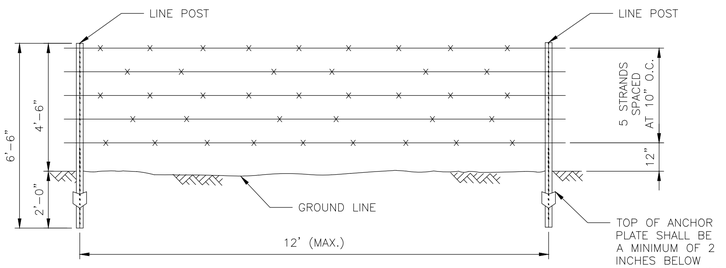

BARBED WIRE REQUIRED SHALL BE STEEL DOUBLE STRAND 12 ½ GA., COATING TYPE Z (ZINC GALVANIZED) AND COATING CLASS 3 WIRE CONFORMING TO ASTM A121.

BARBS SHALL BE (2) POINT, 14 GA. OR LARGER, ROUND OR FLAT AND ON 4" SPACING.

ATTACH EACH BARBED WIRE STRAND TO THE CORNER, END POST, AND PULL PANEL BRACE POST WITH A DOUBLE WRAP OF GALVANIZED WIRE TIED BACK WITH A MIN. OF 4 WRAPS.

ANCHORAGE OF FENCE WIRE TO POSTS WHERE THERE IS A CHANGE IN VERTICAL ALIGNMENT THAT PRODUCES UPWARD OR DOWNWARD PULL SHALL BE ACCOMPLISHED WITH DOUBLE TIE WIRES TO EACH SUCCESSIVE FENCE WIRE. THE ENGINEER WILL DESIGNATE THE POSTS WHERE THIS SPECIAL FASTENING OF THE FENCE WIRES ARE REQUIRED.

5-STRAND BARBED WIRE

NOT TO SCALE

Freese and Nichols, Inc.
Texas Registered Engineering Firm F-2144
STATE OF TEXAS
DUSTIN G. MORTENSEN
100000
LICENSED
PROFESSIONAL ENGINEER
4-23-2015

DESIGNED BY: JWE
DRAWN BY: CJG
CHECKED BY: DGM
FILE NAME: TX-NRC-DT-FENCE01.dwg
DATE CHECKED: 4/22/2015

MISCELLANEOUS FENCE DETAILS

FLOODWATER RETARDING STRUCTURE NO. 6 REHABILITATION
PLUM CREEK WATERSHED
OF THE
PLUM CREEK WATER, TEXAS

United States Department of Agriculture
Natural Resources Conservation Service

REVISIONS DATE

DRAWING NO. TX-EN-0650

SHEET C-47

ACAD Rel: 19.1s (LMS Tech)
Filename: N:\WR\2012 Drawing\TX-NRC-DT-FENCE01.dwg
Last Saved: 3/6/2015 11:05 AM Saved By: 02389

Plot Date: 4/22/2015 1:51 PM Plot By: 02389 Filename: N:\WR\2012 Drawing\TX-NRC-DT-FENCE01.dwg

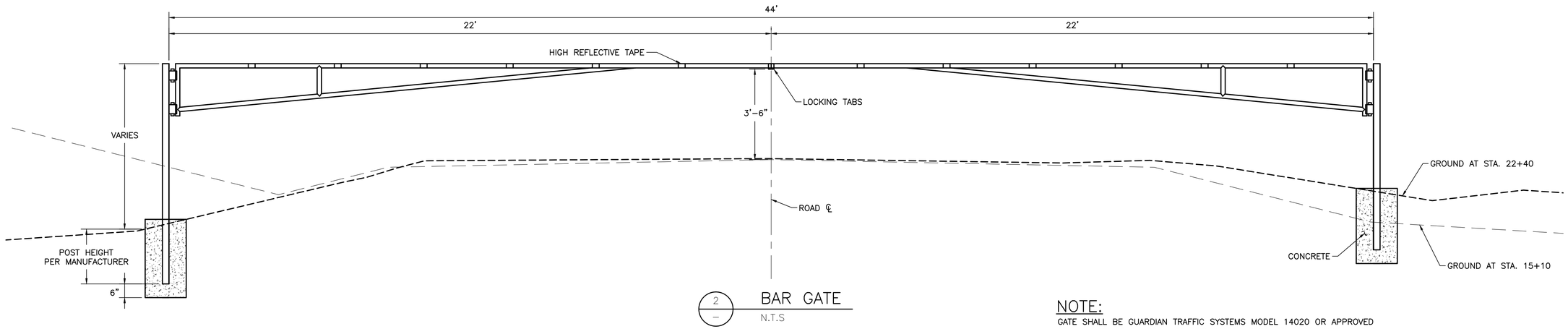

2 — BAR GATE
N.T.S

NOTE:

GATE SHALL BE GUARDIAN TRAFFIC SYSTEMS MODEL 14020 OR APPROVED EQUAL. PROVIDE GUARDIAN TRAFFIC SYSTEM RECEIVER POST MODEL 14030 OR APPROVED EQUAL.

Freese and Nichols, Inc.
Texas Registered Engineering Firm F-2144

STATE OF TEXAS
DUSTIN G. MORTENSEN
100000
LICENSED
PROFESSIONAL ENGINEER
4-23-2015

DESIGNED BY:	JWE
DRAWN BY:	CJG
CHECKED BY:	DGM
FILE NAME:	
DATE CHECKED:	4/22/2015

BAR GATE DETAILS

FLOODWATER RETARDING STRUCTURE NO. 6 REHABILITATION
PLUM CREEK WATERSHED
OF THE
PLUM CREEK WATER, TEXAS

NRCS
United States Department of Agriculture
Natural Resources Conservation Service

REVISIONS DATE

DRAWING NO.
TX-EN-0650

SHEET
C-48

ACAD Rel: 19.1s (LMS Tech)
Filename: N:\WR\2012 Drawing\TX-NRC-DT-FENCE03.dwg
Last Saved: 3/5/2015 11:40 AM Saved By: 02389

Plot Date: 4/22/2015 1:51 PM Plot By: 02389 Filename: N:\WR\2012 Drawing\TX-NRC-DT-FENCE03.dwg

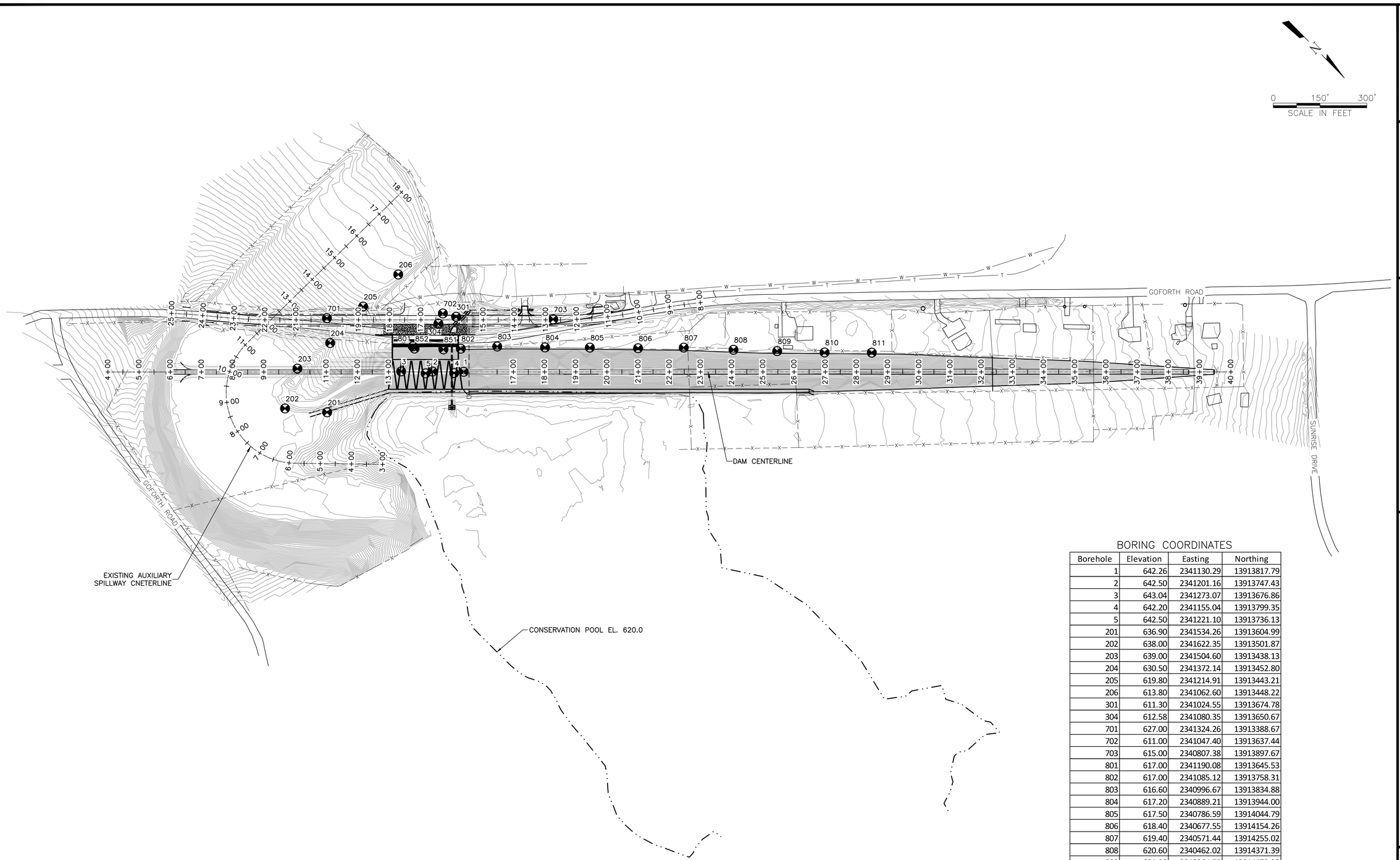

BORING COORDINATES

Borehole	Elevation	Easting	Northing
1	642.26	2341130.29	13913817.79
2	642.50	2341201.16	13913747.43
3	643.04	2341273.07	13913676.86
4	642.20	2341155.04	13913799.35
5	642.50	2341221.10	13913736.13
201	636.90	2341534.26	13913604.99
202	638.00	2341622.35	13913501.87
203	639.00	2341504.60	13913438.13
204	630.50	2341372.14	13913452.80
205	619.80	2341214.91	13913443.21
206	613.80	2341062.60	13913448.22
301	611.30	2341024.55	13913674.78
304	612.58	2341080.35	13913650.67
701	627.00	2341324.26	13913388.67
702	611.00	2341047.40	13913637.44
703	615.00	2340807.38	13913897.67
801	617.00	2341190.08	13913645.53
802	617.00	2341085.12	13913758.31
803	616.60	2340996.67	13913834.88
804	617.20	2340889.21	13913944.00
805	617.50	2340786.59	13914044.79
806	618.40	2340677.55	13914154.26
807	619.40	2340571.44	13914255.02
808	620.60	2340462.02	13914371.39
809	621.80	2340364.78	13914472.25
810	622.90	2340258.91	13914581.38
811	624.40	2340151.17	13914687.58
851	617.00	2341126.61	13913721.26
852	617.00	2341190.98	13913654.57

NOTES:

1. BORING LOCATIONS WERE COLLECTED USING HANDHELD GPS UNIT.
2. BORING ELEVATION ESTIMATED FROM TOPOGRAPHIC SURVEY.
3. ADDITIONAL SOIL AND FOUNDATION INFORMATION ARE AVAILABLE FROM NRCS UPON REQUEST.

Freese and Nichols, Inc.
Texas Registered Engineering Firm F-2144
STATE OF TEXAS
DUSTIN G. MORTENSEN
100000
LICENSED
PROFESSIONAL ENGINEER
4-23-2015

DESIGNED BY: JWE
DRAWN BY: CJG
CHECKED BY: DGM
FILE NAME: TX-NRC-PL-BORE01.dwg
DATE CHECKED: 4/22/2015

GEOLOGICAL BOREHOLE LOCATIONS - PLAN VIEW

FLOODWATER RETARDING STRUCTURE NO. 6 REHABILITATION
PLUM CREEK WATERSHED
OF THE
PLUM CREEK WATER, TEXAS

NRCS
United States Department of Agriculture
Natural Resources Conservation Service

REVISIONS DATE

DRAWING NO.
TX-EN-0650

SHEET
C-49

ACAD Rel: 19.1s (LMS Tech)
Filename: N:\WR\2012 Drawing\TX-NRC-PL-BORE01.dwg
Last Saved: 2/18/2015 12:18 PM Saved By: 02389

Plot Date: 4/22/2015 1:52 PM Plot By: 02389 Filename: N:\WR\2012 Drawing\TX-NRC-PL-BORE01.dwg

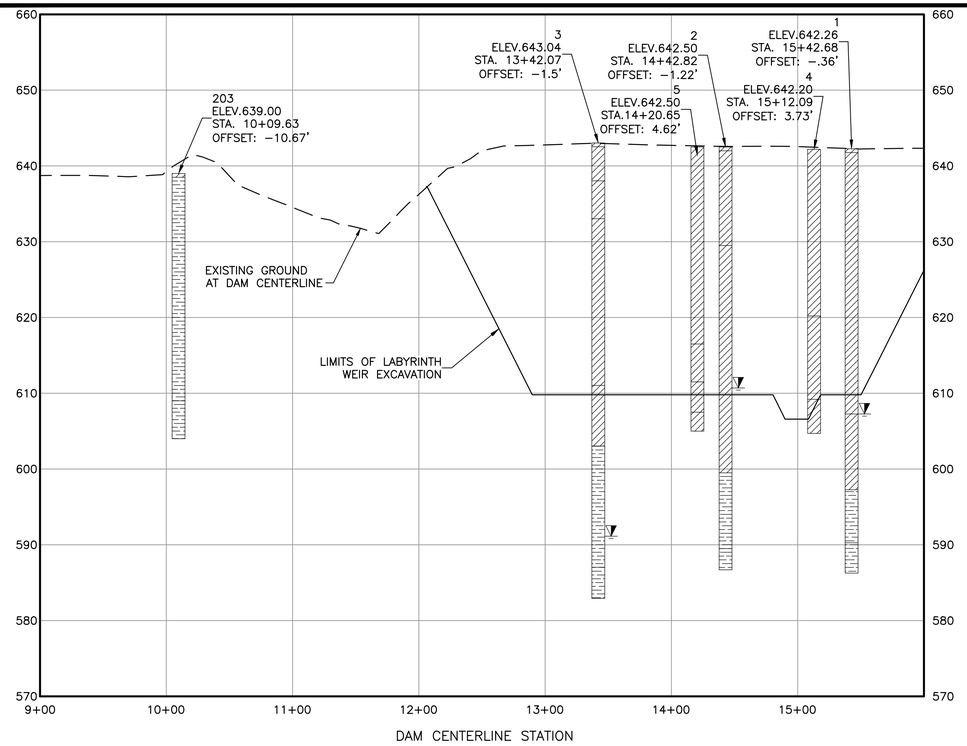

EMBANKMENT GEOLOGIC PROFILE

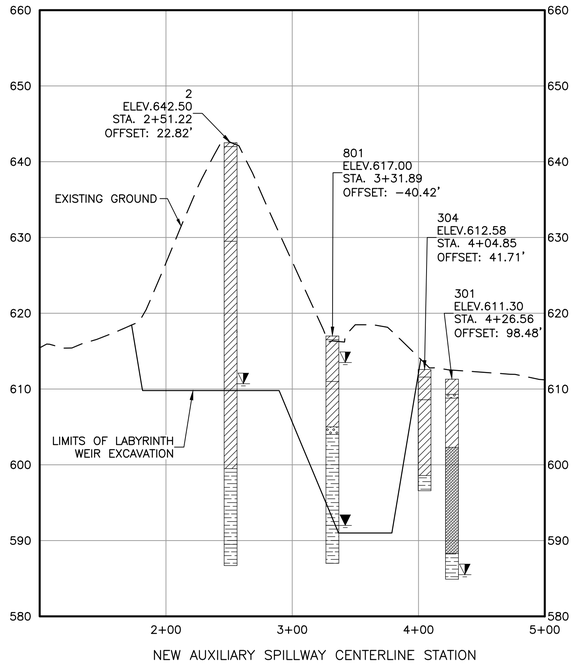

NEW AUXILIARY SPILLWAY GEOLOGIC PROFILE

LEGEND:

- CH: USCS High Plasticity Clay
- CL−CH: USCS Low to High Plasticity Clay
- CLS: USCS Low Plasticity Sandy Clay
- GC: USCS Clayey Gravel
- Mudstone: Mudstone
- SM: USCS Silty Sandy
- WATER LEVEL AT END OF DRILLING
- WATER LEVEL AFTER MONITORING

NOTE:

POSITIVE OFFSETS ARE RIGHT
NEGATIVE OFFSETS ARE LEFT

SCALE IN FEET HORIZONTAL: 0 20' 40' 60' 120'

SCALE IN FEET VERTICAL: 0 10' 20'

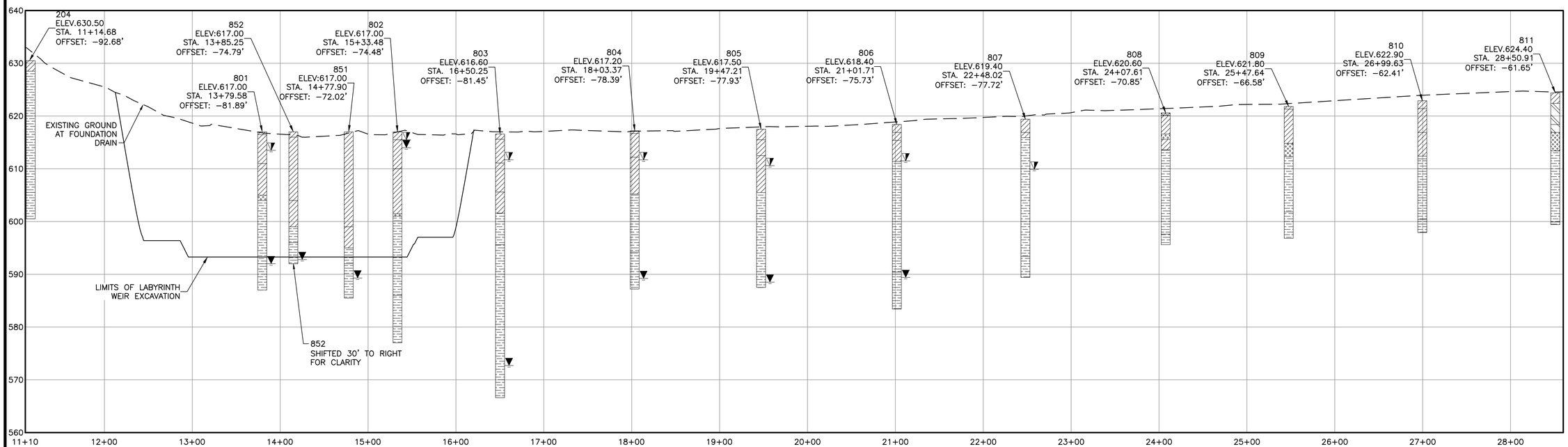

FOUNDATION DRAIN GEOLOGIC PROFILE

Freese and Nichols, Inc.
Texas Registered Engineering Firm F-2144
STATE OF TEXAS
DUSTIN G. MORTENSEN
100000
LICENSED
PROFESSIONAL ENGINEER
4-23-2015

DESIGNED BY: JWE
DRAWN BY: CJG
CHECKED BY: DGM
FILE NAME: TX−NRC−PP−BORE01.dwg
DATE CHECKED: 4/22/2015

GEOLOGICAL BOREHOLE− PROFILES

FLOODWATER RETARDING STRUCTURE NO. 6 REHABILITATION
PLUM CREEK WATERSHED
OF THE
PLUM CREEK WATER, TEXAS

United States Department of Agriculture
Natural Resources Conservation Service

REVISIONS DATE

DRAWING NO. TX−EN−0650

SHEET C−50

ACAD Rel 18.2s (LMS Tech) User: DGM
[NRC14285][0.0, 0.0]N:\WR\2012 DRAWING\TX−NRC−PP−BORE01.DWG LAYOUT: Layout
11/20/2014 12:01:21 P.M. LTS: 1.000 PSLTS: 1 TWIST: 0.0, 0.0, 0.0, 0.0
2 REFERENCE FILES: N:\STANDARD\2012\DGM−INTERM−SEAL and N:\STANDARD\2012\TX−NRC−FULL BORDER

Plot Date: 4/22/2015 1:52 PM Plot By: 02389 Filename: N:\WR\2012 Drawing\TX−NRC−PP−BORE01.dwg

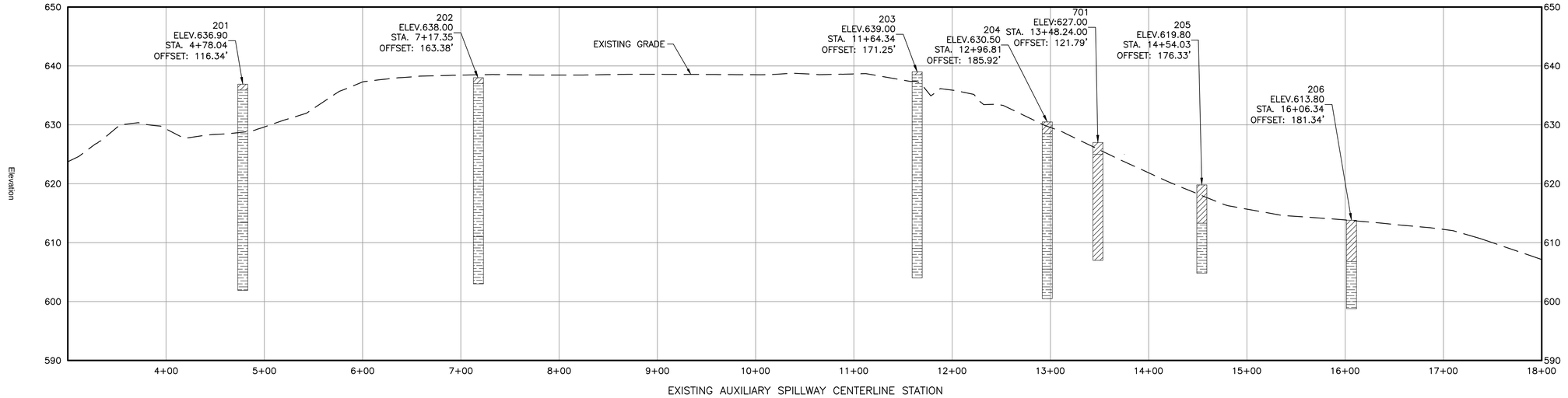

EXISTING AUXILIARY SPILLWAY GEOLOGIC PROFILE

0 20' 40' 60' 120'
SCALE IN FEET
HORIZONTAL

0 10' 20'
SCALE IN FEET
VERTICAL

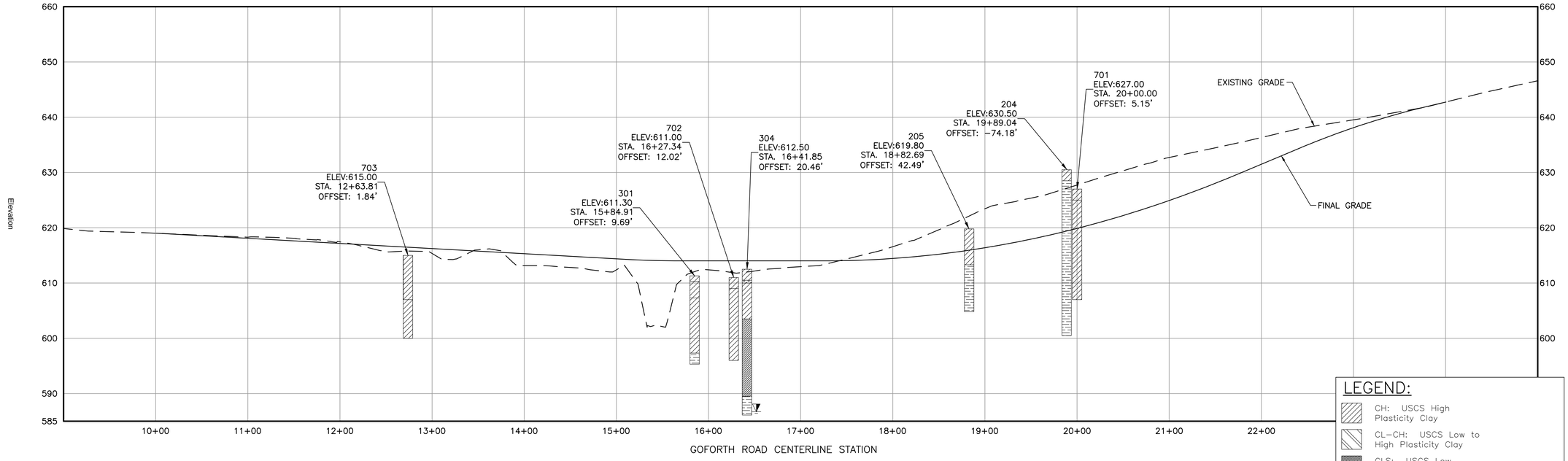

GOFORTH ROAD GEOLOGIC PROFILE

NOTE:
POSITIVE OFFSETS ARE RIGHT
NEGATIVE OFFSETS ARE LEFT

LEGEND:

- CH: USCS High Plasticity Clay
- CL-CH: USCS Low to High Plasticity Clay
- CLS: USCS Low Plasticity Sandy Clay
- GC: USCS Clayey Gravel
- Mudstone: Mudstone
- SM: USCS Silty Sand
- WATER LEVEL AT END OF DRILLING
- WATER LEVEL AFTER MONITORING

Freese and Nichols, Inc.
Texas Registered Engineering Firm F-2144

STATE OF TEXAS
DUSTIN G. MORTENSEN
100000
LICENSED
PROFESSIONAL ENGINEER
4-23-2015

DESIGNED BY:	JWE
DRAWN BY:	CJG
CHECKED BY:	DGM
FILE NAME:	TX-NRC-PP-BORE01.dwg
DATE CHECKED:	4/22/2015

GEOLOGICAL BOREHOLE- PROFILES

FLOODWATER RETARDING STRUCTURE NO. 6 REHABILITATION
PLUM CREEK WATERSHED
OF THE
PLUM CREEK WATER, TEXAS

NRCS
United States Department of Agriculture
Natural Resources Conservation Service

REVISIONS DATE

DRAWING NO.
TX-EN-0650

SHEET
C-51

ACAD Rel: 19.1s (LMS Tech)
Filename: N:\WR\2012 Drawing\TX-NRC-PP-BORE01.dwg
Last Saved: 4/13/2015 2:07 PM Saved By: 02389

Plot Date: 4/22/2015 1:52 PM Plot By: 02389 Filename: N:\WR\2012 Drawing\TX-NRC-PP-BORE01.dwg

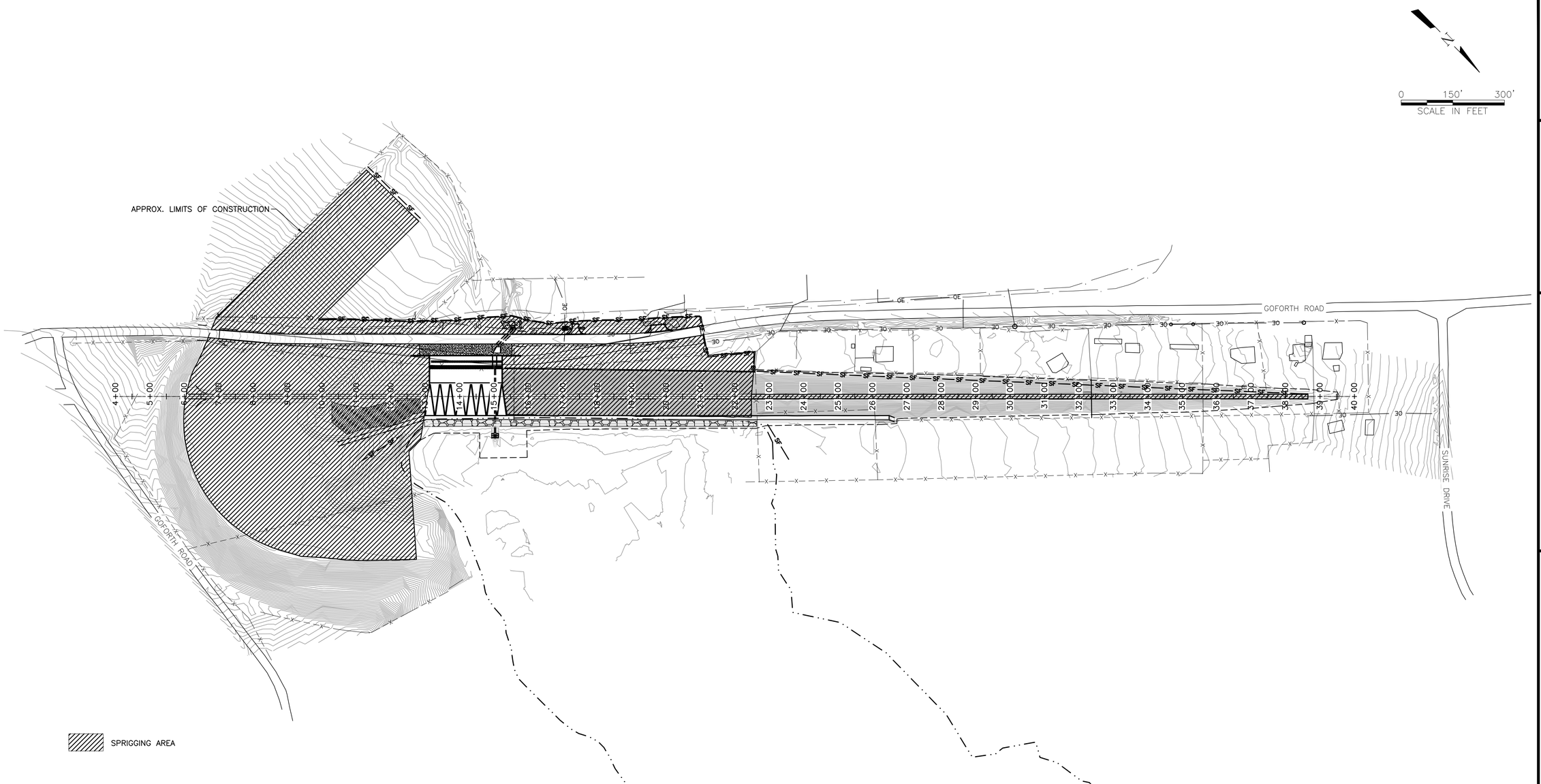

0 150' 300'
SCALE IN FEET

EROSION AND SEDIMENT CONTROL NOTES:

SEDIMENT FILTERS

1. SEDIMENT FILTERS SHALL BE FABRIC (GEOTEXTILE) SILT FENCES AS SPECIFIED IN TABLE 1 OF ASTM 6467 AND SHALL BE INSTALLED ACCORDING TO THE REQUIREMENTS OF ASTM D6462.
2. SEDIMENT FILTERS SHALL BE PROVIDED AT THE FOLLOWING LOCATIONS.
   (A) ALONG THE DOWNSTREAM BOUNDARY OF ANY AREA WHICH IS STRIPPED OF EXISTING VEGETATION AND/OR SURFACE MATERIAL DURING ANY PHASE OF CONSTRUCTION ACTIVITY.
   (B) ALONG THE DOWNSTREAM BOUNDARY OF ANY SOIL MATERIAL WHICH IS STOCKPILED DURING ANY PHASE OF CONSTRUCTION ACTIVITY FOR MORE THAN 14 DAYS.
   (C) OTHER AREAS WHICH ARE DETERMINED BY THE CONTRACTING OFFICER TO BE POTENTIAL SILT SOURCES.
3. SEDIMENT FILTERS SHALL NOT BE USED WHERE CONCENTRATED FLOWS WHICH EXCEED ONE CFS ARE EXPECTED, OR WHERE DRAINAGE AREA EXCEEDS TWO ACRES.
4. THE HEIGHT OF SILT FENCE SHALL NOT EXCEED 48 INCHES (HIGHER FENCES MAY IMPOUND VOLUMES OF WATER SUFFICIENT TO CAUSE FAILURE TO THE STRUCTURE)
5. SPLICES IN THE FILTER FABRIC ARE NOT RECOMMENDED. WHEN JOINTS ARE UNAVOIDABLE, FABRIC SHALL BE SPLICED TOGETHER ONLY AT A SUPPORT POST, WITH A MIN. 6-INCH LAP.
6. POST SHALL BE SPACED A MAXIMUM OF 6 FEET APART AT THE FENCE LOCATION AND DRIVEN SECURELY INTO THE GROUND (MIN. OF 12 INCHES).
7. THE WIRE MESH SUPPORT FENCE MAY BE ELIMINATED BY USING EXTRA STRENGTH FILTER FABRIC AND POST SPACED AT 4 FEET. IN THIS CASE, THE FABRIC IS STAPLED OR WIRED DIRECTLY TO THE POST.
8. CONTRACTOR SHALL ADD LOCATION(S) OF SEDIMENT FENCE TO PLAN AS REQUIRED. CONTRACTOR SHALL INDICATE ON THE PLAN ALL PRODUCT SPECIFIC STORAGE AREAS AS DESCRIBED IN THE SWPPP. THESE AREAS SHALL INCLUDE, BUT ARE NOT LIMITED TO, EQUIPMENT STORAGE, FUEL STORAGE, CONCRETE WASHOUT AREAS, AND HAZARDOUS MATERIAL STORAGE.

MAINTENANCE

1. SEDIMENT FILTERS SHALL BE INSPECTED IMMEDIATELY AFTER EACH RAINFALL AND DURING DAILY PROLONGED RAINFALL. ANY REQUIRED REPAIRS SHALL BE MADE IMMEDIATELY.
2. SILT DEPOSITS SHOULD BE REMOVED AFTER EACH STORM EVENT. THEY MUST BE REMOVED WHEN THE LEVEL OF DEPOSITS REACH APPROXIMATELY ONE-HALF THE HEIGHT OF THE SEDIMENT FILTER.
3. SHOULD THE FABRIC ON A SILT FENCE DECOMPOSE OR BECOME INEFFECTIVE PRIOR TO THE END OF THE EXPECTED USABLE LIFE, THE FABRIC SHALL BE REPLACED PROMPTLY UNLESS WEEKLY INSPECTION REPORTS INDICATE THAT THE REPLACEMENT IS UNNECESSARY.

Freese and Nichols, Inc.
Texas Registered Engineering Firm F-2144
STATE OF TEXAS
DUSTIN G. MORTENSEN
100000
LICENSED
PROFESSIONAL ENGINEER
4-23-2015

DESIGNED BY: JWE
DRAWN BY: CJG
CHECKED BY: DGM
FILE NAME: TX-NRC-PL-DRNG.dwg
DATE CHECKED: 4/22/2015

STORMWATER POLLUTION PREVENTION PLAN

FLOODWATER RETARDING STRUCTURE NO. 6 REHABILITATION
PLUM CREEK WATERSHED
OF THE
PLUM CREEK WATER, TEXAS

NRCS
United States Department of Agriculture
Natural Resources Conservation Service

REVISIONS	DATE

DRAWING NO.
TX-EN-0650

SHEET
C-52

ACAD Rel: 19.1s (LMS Tech)
Filename: N:\WR\2012 Drawing\TX-NRC-PL-DRNG.dwg
Last Saved: 4/20/2015 2:32 PM Saved By: dgm

Plot Date: 4/22/2015 1:52 PM Plot By: 02389 Filename: N:\WR\2012 Drawing\TX-NRC-PL-DRNG.dwg

GENERAL NOTES

1. VERIFY ALL DIMENSIONS, ELEVATIONS, OPENING SIZES, AND MECHANICAL EQUIPMENT WEIGHTS PRIOR TO STARTING WORK.
2. REMOVE ALL ABANDONED FOUNDATIONS, UTILITIES, PIPELINES, ETC. THAT INTERFERE WITH NEW CONSTRUCTION.
3. FIELD VERIFY ALL EXISTING CONDITIONS, INCLUDING LOCATION AND DIMENSIONS OF ALL EXISTING CONSTRUCTION AND UTILITIES. NOTIFY ENGINEER IF THERE IS A CONFLICT BETWEEN THE CONTRACT DOCUMENTS AND EXISTING CONDITIONS BEFORE PROCEEDING WITH WORK.
4. STRUCTURES ARE DESIGNED FOR OPERATIONAL LOADS ON COMPLETED STRUCTURES ONLY. DURING CONSTRUCTION, STRUCTURES SHALL BE PROTECTED BY TEMPORARY BRACING AND SHORING AS REQUIRED FOR STABILITY DURING CONSTRUCTION. THE DESIGN OF BRACING AND SHORING IS THE RESPONSIBILITY OF THE CONTRACTOR.
5. SEE OTHER DISCIPLINE DRAWINGS FOR SIZE AND LOCATION OF ALL OPENINGS, DEPRESSIONS, OFFSETS, SLEEVES, CURBS, PADS, INSERTS, ETC. NOT SHOWN ON STRUCTURAL DRAWINGS. BEFORE FABRICATION OF MATERIALS, COORDINATE WITH MECHANICAL AND ELECTRICAL EQUIPMENT REQUIREMENTS.
6. PLANS, SECTIONS, AND DETAILS ARE NOT TO BE SCALED FOR DETERMINATION OF QUANTITIES, LENGTHS, OR FIT OF MATERIALS.
7. THE GENERAL NOTES AND TYPICAL DETAILS ARE GENERAL AND APPLY TO THE ENTIRE PROJECT EXCEPT WHERE THERE ARE SPECIFIC INDICATIONS TO THE CONTRARY.

CONCRETE AND REINFORCEMENT

1. CONCRETE CONSTRUCTION SHALL CONFORM TO THE LATEST EDITIONS OF ACI 301, ACI 318, AND ACI 350, AND US ARMY CORPS OF ENGINEERS EM 1110–2–2104.
2. ALL DETAILING, FABRICATION, AND ERECTION OF REINFORCING BARS, UNLESS NOTED OTHERWISE, SHALL BE IN ACCORDANCE WITH THE LATEST EDITION OF ACI 315 "DETAILS AND DETAILING OF CONCRETE REINFORCEMENT."
3. CONCRETE SHALL HAVE A MINIMUM 28–DAY COMPRESSIVE STRENGTH OF 4000 PSI, UNLESS NOTED OTHERWISE.
4. REINFORCING SHALL BE IN ACCORDANCE WITH ASTM A615, GRADE 60, DEFORMED.
5. CONCRETE CLEAR COVER OVER REINFORCING SHALL BE AS NOTED BELOW, UNLESS NOTED OTHERWISE. CLEAR COVER DIMENSIONS ARE MARKED "CLR".
   A. UNFORMED SURFACES IN CONTACT WITH FOUNDATION: 3"
   B. FORMED AND SCREEDED SURFACES SUBJECT TO CAVITATION OR ABRASION, SUCH AS CHUTE AND BAFFLE BLOCKS, STILLING BASIN SLABS, AND TUNNEL CONDUITS: 6"
   C. FORMED AND SCREEDED SURFACES SUCH AS STILLING BASIN WALLS, CHUTE SPILLWAY SLABS, AND CHANNEL LINING SLABS ON GRADE:
      i. EQUAL TO OR GREATER THAN 24" IN THICKNESS: 4"
      ii. GREATER THAN 12" AND LESS THAN 24" IN THICKNESS: 3"
      iii. EQUAL TO OR LESS THAN 12" IN THICKNESS SHALL BE IN ACCORDANCE WITH ACI 318.
6. ALL EXPOSED EDGES OF CONCRETE SHALL BE CHAMFERED 3/4" INSIDE FORMS OR TOOLED TO 3/4" RADIUS ON SLABS, UNLESS NOTED OTHERWISE.
7. ADDITIONAL CONSTRUCTION JOINTS SHALL HAVE PRIOR APPROVAL OF THE ENGINEER.
8. PENETRATIONS OTHER THAN SHOWN SHALL NOT BE ALLOWED WITHOUT PRIOR APPROVAL FROM THE ENGINEER.
9. ALL REINFORCING SHALL BE CONTINUOUS. CONTINUOUS BARS SHALL LAP IN ACCORDANCE WITH THE FOLLOWING TABLE, UNLESS NOTED OTHERWISE. ALL REBAR EMBEDMENT LENGTHS SHALL BE 75% OF THE LAP SPLICE LENGTH, UNLESS NOTED OTHERWISE. "TOP BARS" ARE HORIZONTAL REINFORCEMENT PLACED SO THAT MORE THAN 12" OF FRESH CONCRETE IS CAST IN THE MEMBER BELOW THE BARS (INCLUDING WALLS). "OTHER BARS" ARE ALL BARS OTHER THAN "TOP BARS".

REBAR LAP SPLICE LENGTHS (INCHES)

BAR SIZE	MIN CONCRETE CLEAR COVER	4,000 PSI	
		TOP BARS	OTHER BARS
#3	1.0"	16	16
#4	1.0"	20	16
#5	1.0"	30	23
	1.5"	25	20
#6	1.0"	41	32
	1.5"	30	24
#7	1.5"	49	38
	2.0"	43	33
#8	1.5"	62	47
	2.0"	49	38

REBAR LAP SPLICE LENGTHS (INCHES)

BAR SIZE	MIN CONCRETE CLEAR COVER	4,000 PSI	
		TOP BARS	OTHER BARS
#9	1.5"	76	58
	2.0"	60	47
	2.5"	55	43
#10	1.5"	91	71
	2.0"	75	58
	2.5"	65	51
#11	1.5"	110	85
	2.0"	89	69
	2.5"	81	63

10. THE SYMBOL —/=— INDICATES A LAP SPLICE, NOT A BEND IN THE BAR.
11. LAP SPLICES IN BEAMS AND WALLS SHALL BE STAGGERED, UNLESS NOTED OTHERWISE.
12. LAP SPLICES SHALL BE LOCATED WHERE INDICATED ON THE DRAWINGS OR AS APPROVED BY THE ENGINEER.
13. WHEN REINFORCING BARS OF DIFFERENT SIZES ARE TO BE SPLICED, THE LENGTH OF LAP SHALL BE GOVERNED BY THE SMALLER BAR.
14. IF BARS ARE SPACED CLOSER THAN 6" OR 6 BAR DIAMETERS, LAP SPLICES SHALL BE STAGGERED TO PROVIDE 12" CLEAR BETWEEN ENDS OF ADJACENT SPLICES.
15. LAP SPLICES IN REINFORCING BARS AT VERTICAL CONSTRUCTION JOINTS MAY BE SHIFTED TO AGREE WITH THE SEQUENCE OF CONSTRUCTION, UNLESS NOTED OTHERWISE.
16. NON–CONTACT LAP SPLICES SHALL NOT BE SPACED FARTHER APART THAN ONE–FIFTH THE REQUIRED LENGTH OF LAP SPLICE OR 6", WHICHEVER IS LESS.
17. REINFORCING BARS PARALLELING CONSTRUCTION JOINTS SHALL HAVE A MINIMUM OF 2" CLEAR CONCRETE COVER FROM JOINT.
18. IN CASES WHERE REINFORCING BARS CANNOT BE EXTENDED AS FAR AS REQUIRED DUE TO THE LIMITED EXTENT OF THE ADJACENT CONCRETE STRUCTURE, THE BARS SHALL EXTEND AS FAR AS POSSIBLE AND END IN STANDARD HOOKS.
19. HOOKS SHOWN ON DRAWINGS SHALL BE ASSUMED TO BE STANDARD HOOKS PER ACI 318, UNLESS NOTED OTHERWISE.
20. REINFORCING BARS MAY BE ADJUSTED LATERALLY TO MAINTAIN A CLEAR DISTANCE OF AT LEAST 1" BETWEEN THE REINFORCING BARS AND KEYS, WATERSTOPS, ANCHOR RODS, FORM TIES, CONDUITS, AND OTHER EMBEDDED MATERIAL. IN HEAVILY REINFORCED AREAS, RELOCATION OF EMBEDDED MATERIAL MUST BE CONSIDERED.
21. PROVIDE SHEAR KEYS AT ALL WALL CONSTRUCTION JOINTS IN ACCORDANCE WITH DETAIL 3 ON SHEET S–33.
22. THE CONTRACTOR SHALL BE RESPONSIBLE FOR THE DESIGN OF ALL FORMING, TEMPORARY BRACING, AND SHORING.

FOUNDATION

1. REFER TO PROJECT SPECIFICATIONS FOR GEOTECHNICAL INFORMATION AND LOG OF BORINGS.

WEIR CREST QUALITY CONTROL

1. CREST ELEVATION AND PROFILE SHALL BE BUILT TO THE ELEVATIONS, DIMENSIONS, AND TOLERANCES AS INDICATED ON THE TYPICAL DETAIL 4/S–15. THESE TOLERANCES SHALL NOT BE CONSIDERED CUMULATIVE. THE CREST ELEVATION SHALL BE MEASURED AT THE TOP OF THE AS–BUILT CREST, REGARDLESS OF THE CREST PROFILE TOLERANCES.
2. THE CONTRACTOR IS RESPONSIBLE FOR ESTABLISHING FORM AND CONCRETE PLACEMENT ELEVATIONS. THE CONTRACTOR SHALL PERFORM PRECISION SURVEYS SUBSEQUENT TO EACH CONCRETE PLACEMENT AS A BASIS FOR QUALITY CONTROL. SURVEYS SHALL IDENTIFY LOCAL MAXIMA AND MINIMA, BUT SHALL BE CHECKED AT INTERVALS NO GREATER THAN 10'–0". ANY DISCREPANCIES SHALL BE REPORTED IN WRITING TO THE OWNER'S REPRESENTATIVE PRIOR TO SUBSEQUENT PLACEMENTS.
3. THE CONTRACTOR SHALL PROVIDE ACCESS FOR THE OWNER'S SURVEYOR TO PERFORM INDEPENDENT VERIFICATION OF CREST ELEVATIONS AND PROFILES PRIOR TO SUBSEQUENT PLACEMENTS. THESE VERIFICATIONS SHALL BE PERFORMED AT THE OWNER'S DISCRETION AS A BASIS FOR QUALITY ASSURANCE ONLY.
4. CONTRACTOR SHALL PROVIDE ALUMINUM TEMPLATES FABRICATED TO THE EXACT AS–DESIGNED CREST PROFILE DIMENSIONS AND SHALL BE USED TO DEMONSTRATE ADHERENCE TO SPECIFIED TOLERANCES. TEMPLATES SHALL BE 1/4" THICK WITH A HORIZONTAL TOP EDGE TO FACILITATE LEVELING. ONE TEMPLATE SHALL BE SUBMITTED TO THE OWNER'S REPRESENTATIVE FOR HIS USE. DAMAGED OR WORN TEMPLATES SHALL BE REMOVED FROM THE JOB SITE AND REPLACED.
5. CREST ELEVATIONS OR PROFILES DETERMINED TO BE OUT OF SPECIFIED TOLERANCES SHALL BE REPLACED OR REPAIRED AS APPROVED BY THE OWNER'S REPRESENTATIVE AND AT NO COST TO THE OWNER.

Freese and Nichols, Inc.
Texas Registered Engineering Firm F-2144
MICHAEL RAY ROBERTSON
59701
LICENSED PROFESSIONAL ENGINEER
04/24/15

DESIGNED BY: LB
DRAWN BY: JAW
CHECKED BY: MRR
FILE NAME: ST–NRC–GN–NOTE01.dwg
DATE CHECKED: 4/23/2015

STRUCTURAL GENERAL NOTES

FLOODWATER RETARDING STRUCTURE NO. 6 REHABILITATION
PLUM CREEK WATERSHED
OF THE
PLUM CREEK WATER, TEXAS

NRCS United States Department of Agriculture
Natural Resources Conservation Service

REVISIONS DATE

DRAWING NO. TX–EN–0650

SHEET S–1

Drawing No. N:\ST\ST–NRC–GN–NOTE01.dwg
Last Saved: 4/23/2015 2:17 PM Saved By: 02424
Plot Date: 4/23/2015 5:20 PM Plot By: 02424 Filename: N:\ST\ST–NRC–GN–NOTE01.dwg

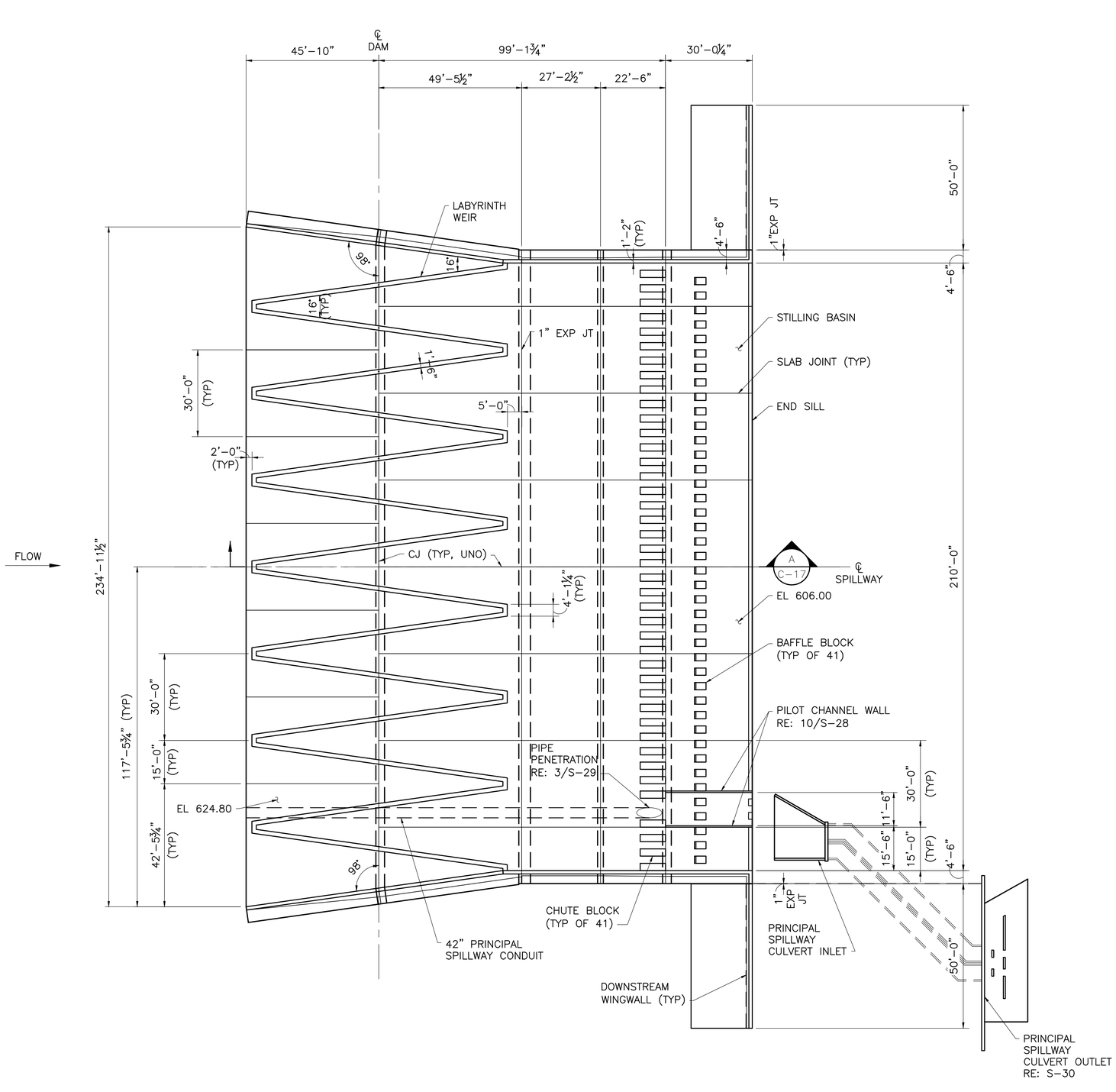

1 SPILLWAY PLAN

0 5' 10'
SCALE IN FEET

Freese and Nichols, Inc.
Texas Registered Engineering Firm F-2144

STATE OF TEXAS
MICHAEL RAY ROBERTSON
59701
REGISTERED PROFESSIONAL ENGINEER
04/24/15

DESIGNED BY: LB
DRAWN BY: JAW
CHECKED BY: MRR
FILE NAME: ST-LAB-PL-OVALL.dwg
DATE CHECKED: 4/23/2015

STRUCTURAL
LABYRINTH WEIR GENERAL PLAN

FLOODWATER RETARDING STRUCTURE NO. 6 REHABILITATION
PLUM CREEK WATERSHED
OF THE
PLUM CREEK WATER, TEXAS

NRCS
United States Department of Agriculture
Natural Resources Conservation Service

REVISIONS DATE

DRAWING NO.
TX-EN-0650

SHEET
S-2

11/19/2014 2:15:41 P.M. LTS: 1.00 PSLTS: 1 TWIST: 0.0, 0.0, 0.0, 0.0, 0.0, 0.0, 0.0, 0.0, 0.0
REFERENCE FILE: N:\STANDARD\2012\TX-NRC-FULL BORDER

Plot Date: 4/23/2015 5:20 PM Plot By: 02424 Filename: N:\ST\ST-LAB-PL-OVALL.dwg

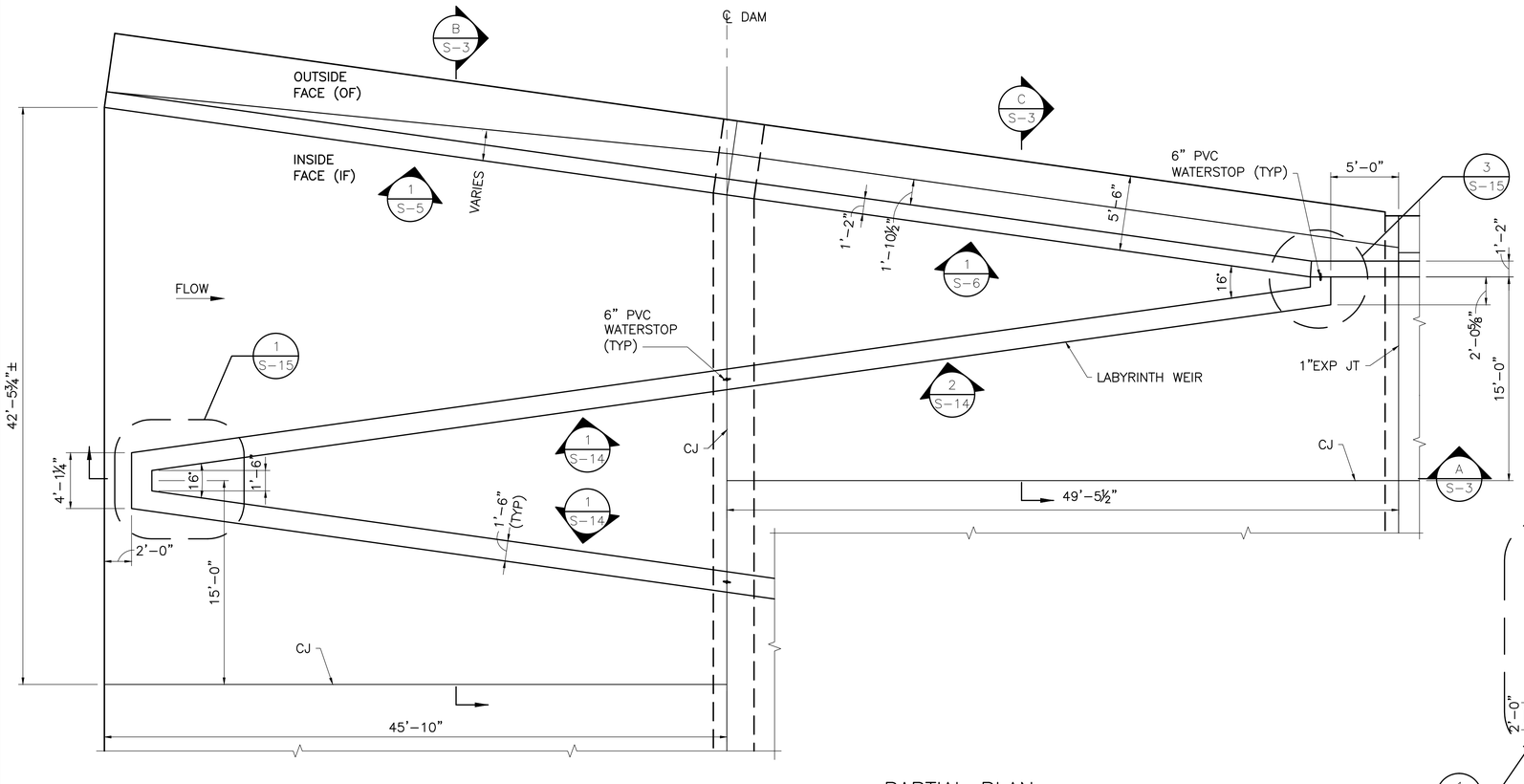

PARTIAL PLAN

0 4' 8'

3/16"=1'-0"

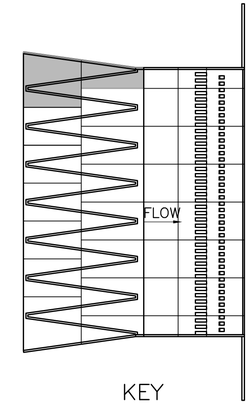

KEY

N.T.S.

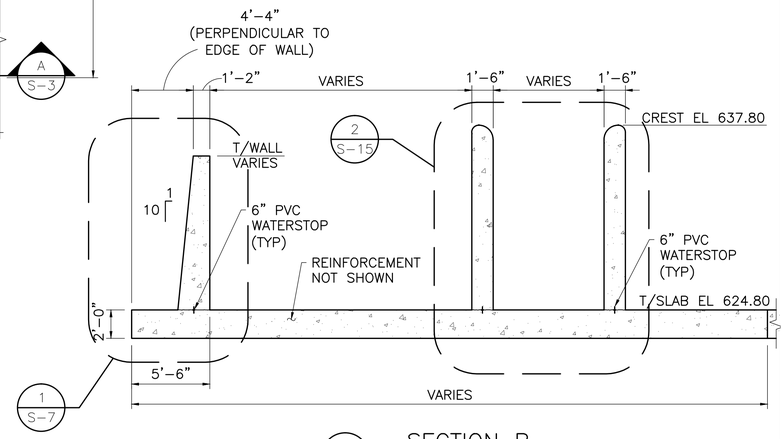

B S-3 SECTION B

0 4' 8'

3/16"=1'-0"

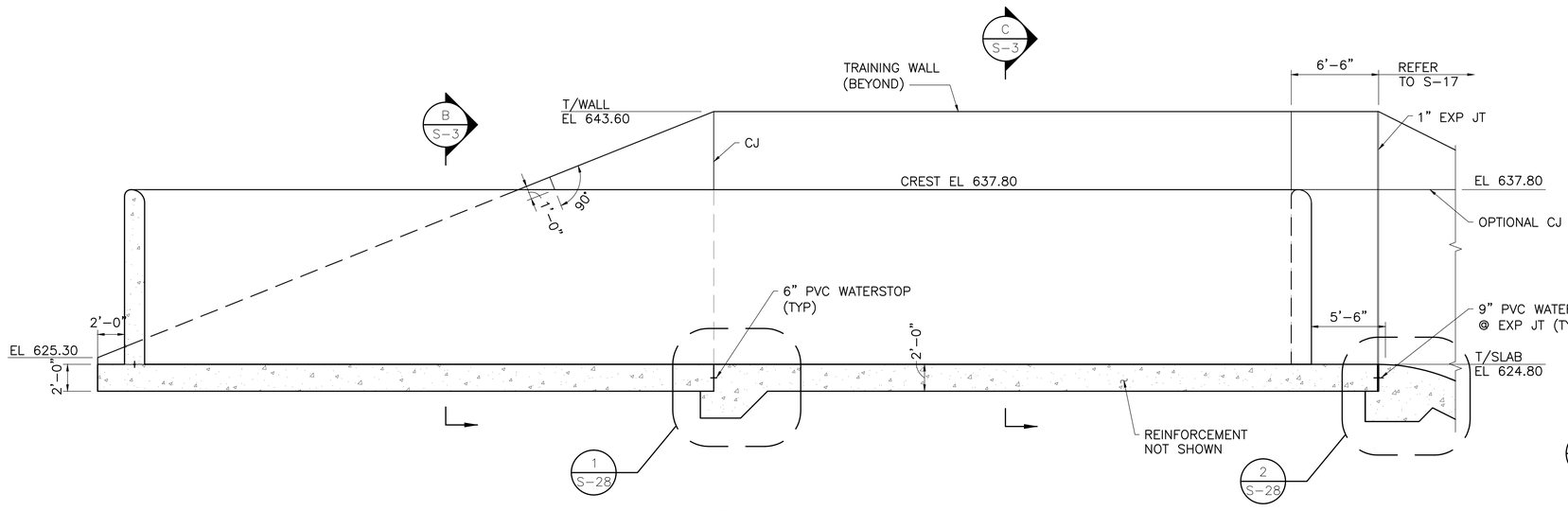

A S-3 SECTION A

0 4' 8'

3/16"=1'-0"

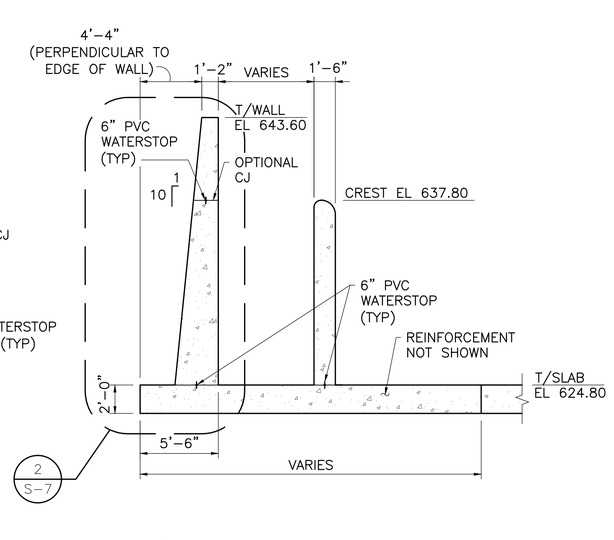

C S-3 SECTION C

0 4' 8'

3/16"=1'-0"

Prepared or Approved by, Firm F-2144
Texas Registered Engineering
MICHAEL RAY ROBERTSON
59701
LICENSED PROFESSIONAL ENGINEER
04/24/15

DESIGNED BY: LB
DRAWN BY: JAW
CHECKED BY: MRR
FILE NAME: ST-LAB-PL-PANELA.dwg
DATE CHECKED: 4/23/2015

STRUCTURAL
LABYRINTH WEIR PARTIAL PLAN AND SECTIONS

FLOODWATER RETARDING STRUCTURE NO. 6 REHABILITATION
PLUM CREEK WATERSHED
OF THE
PLUM CREEK WATER, TEXAS

United States Department of Agriculture
Natural Resources Conservation Service

REVISIONS DATE

DRAWING NO.
TX-EN-0650

SHEET
S-3

11/19/2014 2:15:41 P.M. LTS: 1.00 PSLTS: 1 TWIST: 0.0, 0.0, 0.0, 0.0, 0.0, 0.0, 0.0, 0.0
REFERENCE FILE: N:\STANDARD\2012\TX-NRC-FULL BORDER

Plot Date: 4/23/2015 5:20 PM Plot By: 02424 Filename: N:\ST\ST-LAB-PL-PANELA.dwg

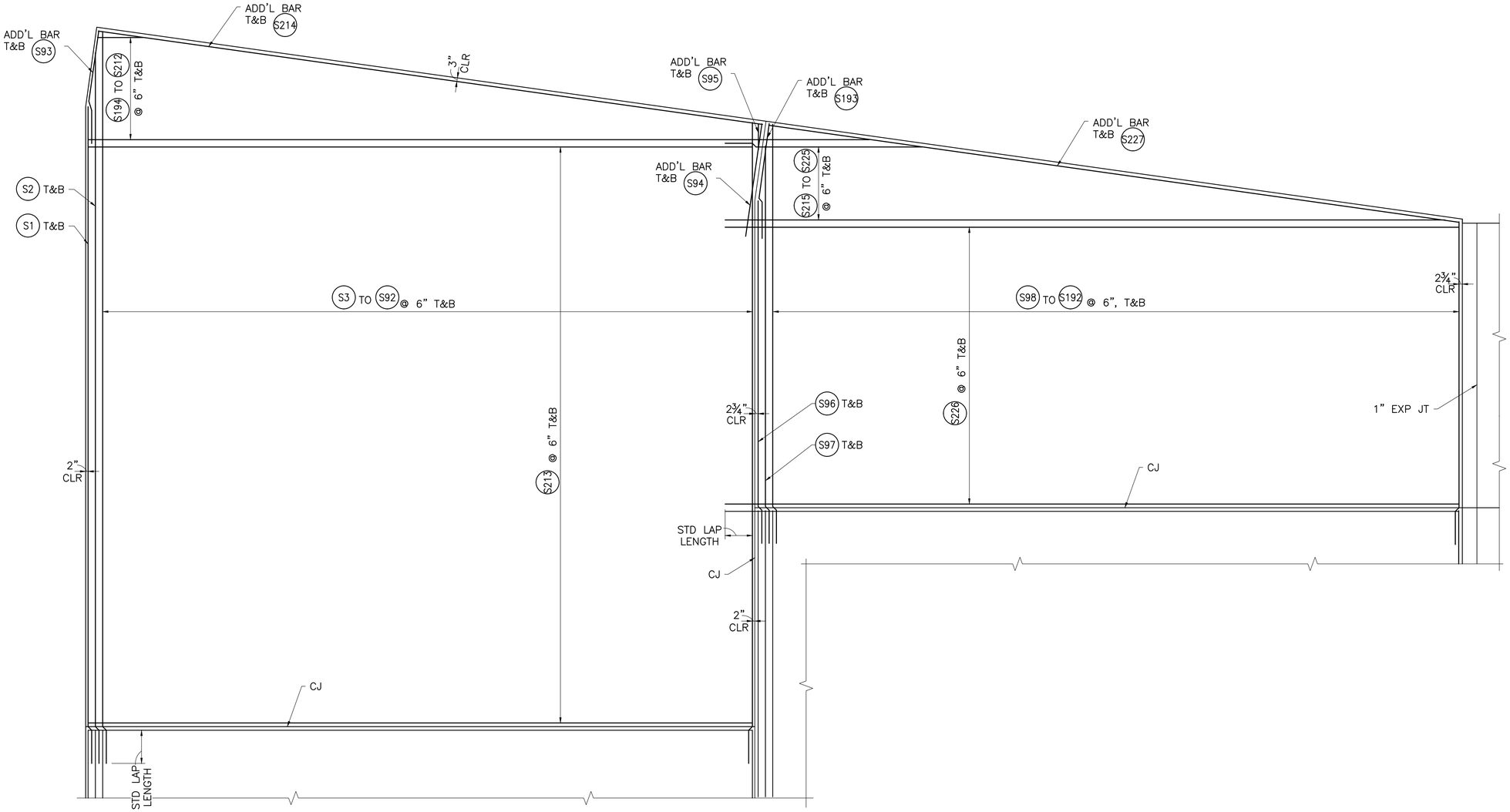

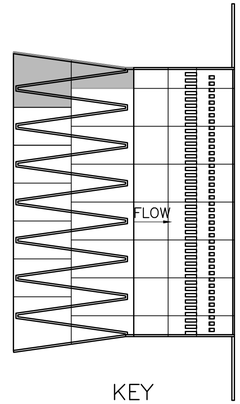

KEY
N.T.S.

NORTH

PARTIAL REINFORCING PLAN

0 1' 2' 4' 8'
1/4"=1'-0"

Last Saved: 4/23/2015 11:49 AM Saved By: 02424

Plot Date: 4/23/2015 5:20 PM Plot By: 02424 Filename: N:\ST\ST-LAB-PL-RENFA.dwg

Prepared and Notarized by, Firm F-2144
Texas Registered Engineering
MICHAEL RAY ROBERTSON
59701
04/23/15

DESIGNED BY: LB
DRAWN BY: JAW
CHECKED BY: MRR
FILE NAME: ST-LAB-PL-RENFA.dwg
DATE CHECKED: 4/23/2015

STRUCTURAL
LABYRINTH WEIR PARTIAL REINFORCEMENT PLAN
FLOODWATER RETARDING STRUCTURE NO. 6 REHABILITATION
PLUM CREEK WATERSHED
OF THE
PLUM CREEK WATER, TEXAS

NRCS
United States Department of Agriculture
Natural Resources Conservation Service

REVISIONS DATE

DRAWING NO.
TX-EN-0650

SHEET
S-4

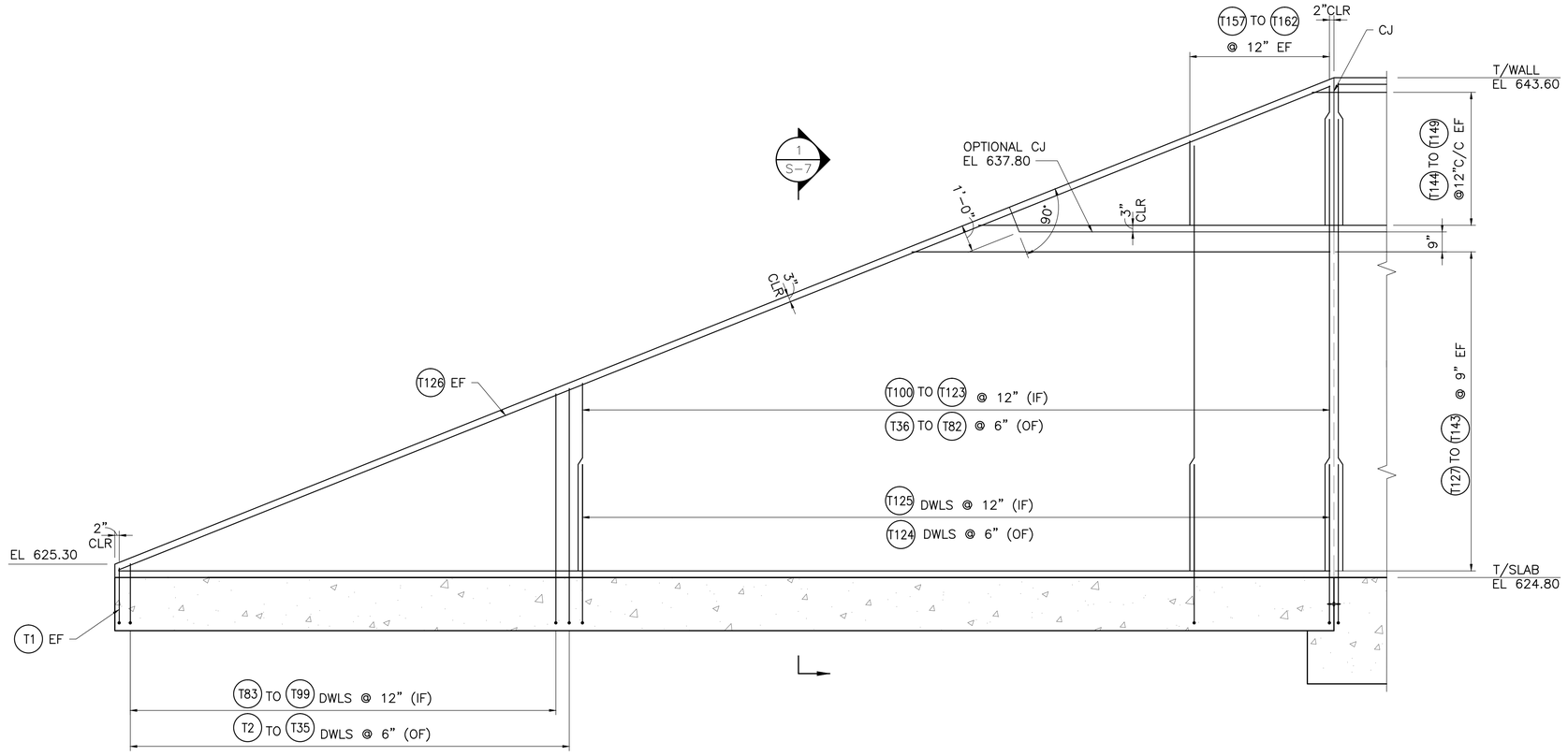

1 S-3 TRAINING WALL INSIDE & OUTSIDE FACE REINFORCEMENT

0 1' 2' 4'
3/8"=1'-0

Freese and Nichols, Inc.
Texas Registered Engineering Firm F-2144

STATE OF TEXAS
MICHAEL RAY ROBERTSON
59701
REGISTERED
PROFESSIONAL ENGINEER
04/24/15

DESIGNED BY: LB
DRAWN BY: JAW
CHECKED BY: MRR
FILE NAME: ST-LAB-EL-PNLA01.dwg
DATE CHECKED: 4/23/2015

STRUCTURAL
LABYRINTH WEIR ELEVATIONS

FLOODWATER RETARDING STRUCTURE NO. 6 REHABILITATION
PLUM CREEK WATERSHED
OF THE
PLUM CREEK WATER, TEXAS

NRCS
United States Department of Agriculture
Natural Resources Conservation Service

REVISIONS DATE

DRAWING NO.
TX-EN-0650

SHEET
S-5

11/25/2014 3:41:32 P.M. LTS: 1.00 PSLTS: 1 TWIST: 0.0, 0.0, 0.0, 0.0, 0.0, 0.0, 0.0, 0.0, 0.0
2 REFERENCE FILES: .\BASE\ST-ENG-STAMP and N:\STANDARD\2012\TX-NRC-FULL BORDER

Plot Date: 4/23/2015 5:21 PM Plot By: 02424 Filename: N:\ST\ST-LAB-EL-PNLA01.dwg

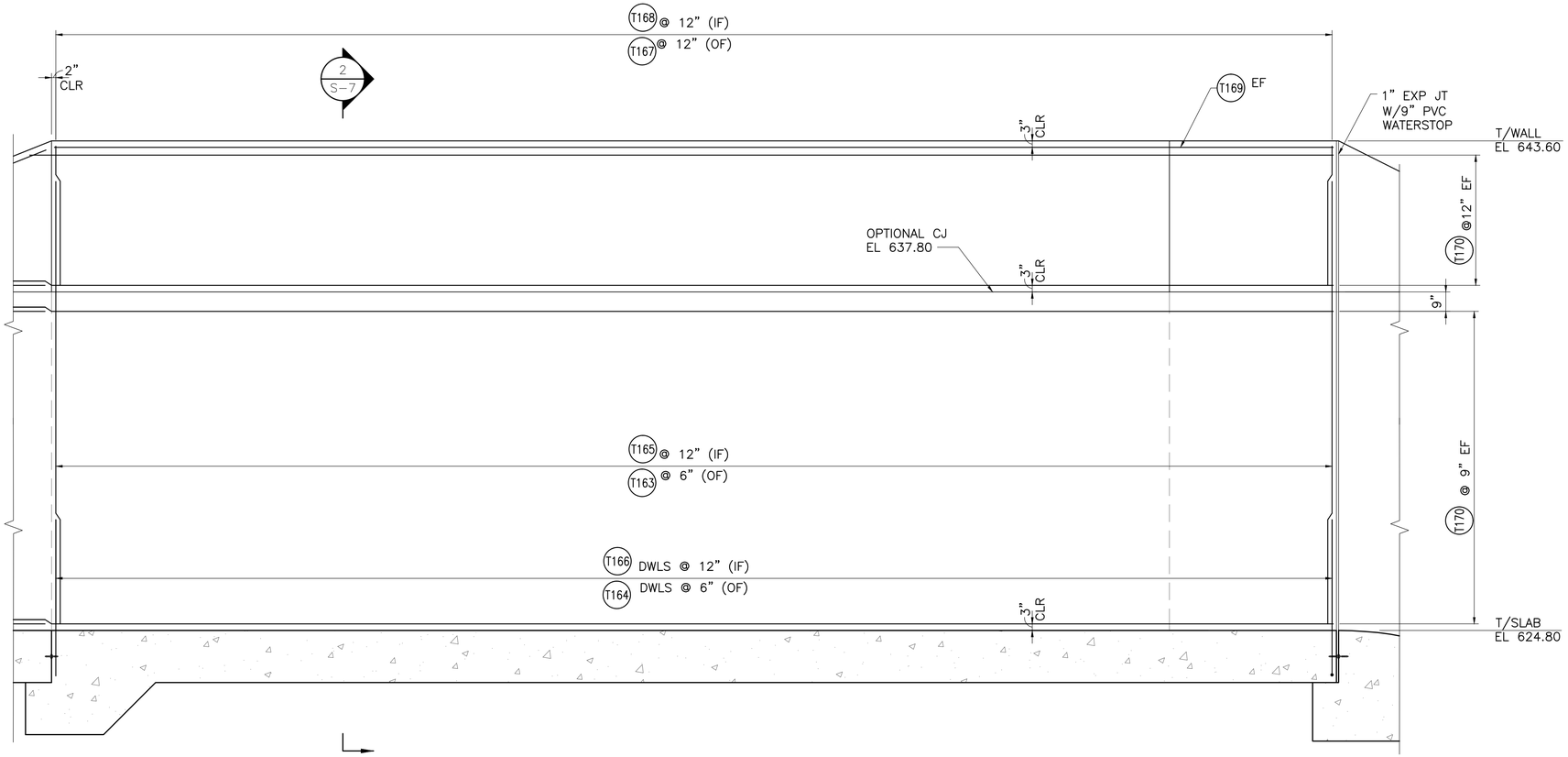

1
S-3

TRAINING WALL INSIDE & OUTSIDE FACE REINFORCEMENT

0 1' 2' 4'
3/8"=1'-0

Freese and Nichols, Inc.
Texas Registered Engineering Firm F-2144

STATE OF TEXAS
MICHAEL RAY ROBERTSON
59701
REGISTERED PROFESSIONAL ENGINEER
04/24/15

DESIGNED BY: LB
DRAWN BY: JAW
CHECKED BY: MRR
FILE NAME: ST-LAB-EL-PNLA02.dwg
DATE CHECKED: 4/23/2015

STRUCTURAL
LABYRINTH WEIR ELEVATIONS

FLOODWATER RETARDING STRUCTURE NO. 6 REHABILITATION
PLUM CREEK WATERSHED
OF THE
PLUM CREEK WATER, TEXAS

NRCS
United States Department of Agriculture
Natural Resources Conservation Service

REVISIONS DATE

DRAWING NO.
TX-EN-0650

SHEET
S-6

11/25/2014 3:41:32 P.M. LTS: 1.00 PSLTS: 1 TWIST: 0.0, 0.0, 0.0, 0.0, 0.0, 0.0, 0.0, 0.0, 0.0
2 REFERENCE FILES: .\BASE\ST-ENG-STAMP and N:\STANDARD\2012\TX-NRC-FULL BORDER

Plot Date: 4/23/2015 5:21 PM Plot By: 02424 Filename: N:\ST\ST-LAB-EL-PNLA02.dwg

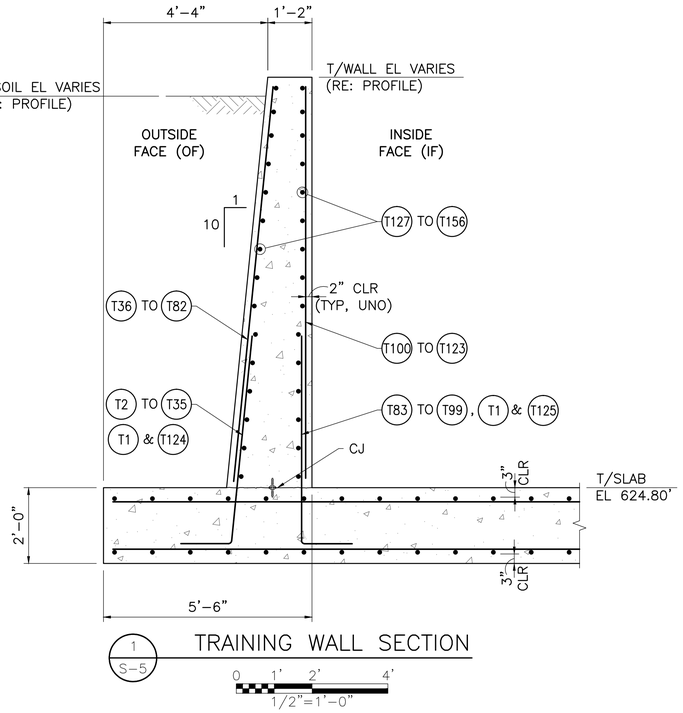

1 S-5 TRAINING WALL SECTION

0 1' 2' 4'

1/2"=1'-0"

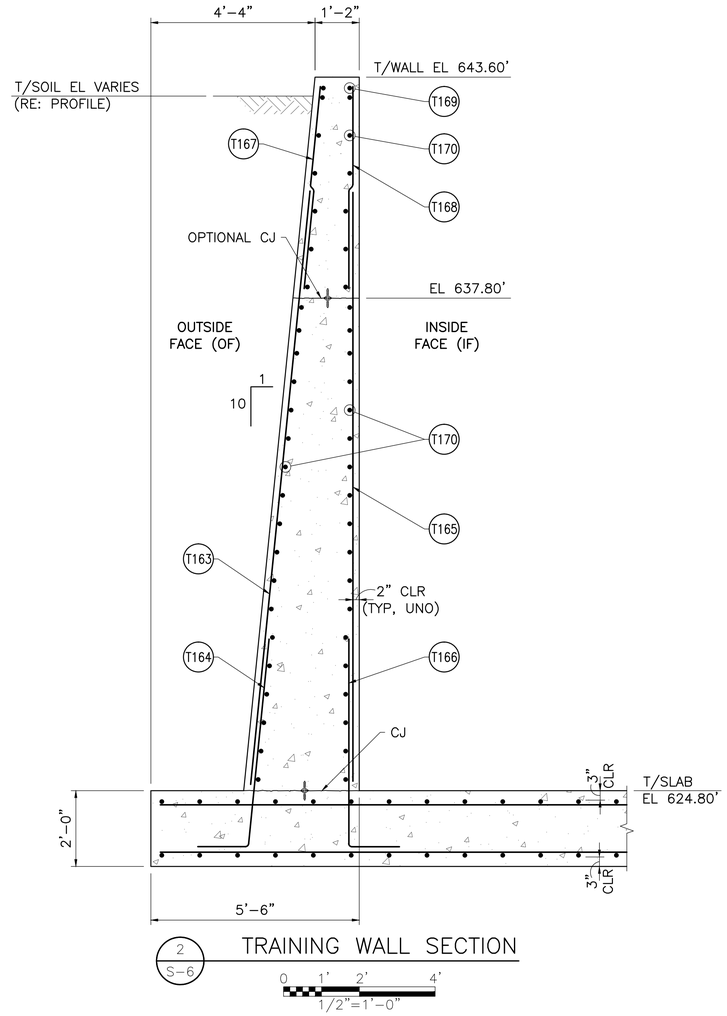

2 S-6 TRAINING WALL SECTION

0 1' 2' 4'

1/2"=1'-0"

Prepared and Notarized, Tom Price Texas Registered Engineering Firm F-2144

MICHAEL RAY ROBERTSON 59701 LICENSED PROFESSIONAL ENGINEER

04/24/15

DESIGNED BY: LB
DRAWN BY: JAW
CHECKED BY: MRR
FILE NAME: ST-LAB-SC-PNLA01.dwg
DATE CHECKED: 4/23/2015

STRUCTURAL
LABYRINTH WEIR SECTIONS

FLOODWATER RETARDING STRUCTURE NO. 6 REHABILITATION
PLUM CREEK WATERSHED
OF THE
PLUM CREEK WATER, TEXAS

NRCS
United States Department of Agriculture
Natural Resources Conservation Service

REVISIONS	DATE

DRAWING NO.
TX-EN-0650

SHEET
S-7

Drawing: N:\ST\ST-LAB-SC-PNLA01.dwg
Last Saved: 4/23/2015 11:55 AM Saved By: 02424

Plot Date: 4/23/2015 5:21 PM Plot By: 02424 Filename: N:\ST\ST-LAB-SC-PNLA01.dwg

Mark	Size (Bar #)	Quantity	Type	B (ft) (in)	C (ft) (in)	D (ft) (in)	Length (ft) (in)	Total Length (ft) (in)
T1	8	4	H	2–0	1–0	–	3–0	12–0
T2	8	2	BTH	2–3	1–0	–	3–3	6–6
T3	8	2	BTH	2–6	1–0	–	3–6	7–0
T4	8	2	BTH	2–8	1–0	–	3–8	7–4
T5	8	2	BTH	2–11	1–0	–	3–11	7–10
T6	8	2	BTH	3–1	1–0	–	4–1	8–2
T7	8	2	BTH	3–3	1–0	–	4–3	8–6
T8	8	2	BTH	3–6	1–0	–	4–6	9–0
T9	8	2	BTH	3–8	1–0	–	4–8	9–4
T10	8	2	BTH	3–10	1–0	–	4–10	9–8
T11	8	2	BTH	4–1	1–0	–	5–1	10–2
T12	8	2	BTH	4–3	1–0	–	5–3	10–6
T13	8	2	BTH	4–6	1–0	–	5–6	11–0
T14	8	2	BTH	4–8	1–0	–	5–8	11–4
T15	8	2	BTH	4–10	1–0	–	5–10	11–8
T16	8	2	BTH	5–1	1–0	–	6–1	12–2
T17	8	2	BTH	5–3	1–0	–	6–3	12–6
T18	8	2	BTH	5–6	1–0	–	6–6	13–0
T19	8	2	BTH	5–8	1–0	–	6–8	13–4
T20	8	2	BTH	5–10	1–0	–	6–10	13–8
T21	8	2	BTH	6–1	1–0	–	7–1	14–2
T22	8	2	BTH	6–3	1–0	–	7–3	14–6
T23	8	2	BTH	6–5	1–0	–	7–5	14–10
T24	8	2	BTH	6–8	1–0	–	7–8	15–4
T25	8	2	BTH	6–10	1–0	–	7–10	15–8
T26	8	2	BTH	7–1	1–0	–	8–1	16–2
T27	8	2	BTH	7–3	1–0	–	8–3	16–6
T28	8	2	BTH	7–5	1–0	–	8–5	16–10
T29	8	2	BTH	7–8	1–0	–	8–8	17–4
T30	8	2	BTH	7–10	1–0	–	8–10	17–8
T31	8	2	BTH	8–1	1–0	–	9–1	18–2
T32	8	2	BTH	8–3	1–0	–	9–3	18–6
T33	8	2	BTH	8–5	1–0	–	9–5	18–10
T34	8	2	BTH	8–8	1–0	–	9–8	19–4
T35	8	2	BTH	8–10	1–0	–	9–10	19–8
T36	8	2	ST	7–0	–	–	7–0	14–0
T37	8	2	ST	7–3	–	–	7–3	14–6
T38	8	2	ST	7–5	–	–	7–5	14–10
T39	8	2	ST	7–8	–	–	7–8	15–4
T40	8	2	ST	7–10	–	–	7–10	15–8
T41	8	2	ST	8–0	–	–	8–0	16–0
T42	8	2	ST	8–3	–	–	8–3	16–6
T43	8	2	ST	8–5	–	–	8–5	16–10
T44	8	2	ST	8–8	–	–	8–8	17–4
T45	8	2	ST	8–10	–	–	8–10	17–8
T46	8	2	ST	9–0	–	–	9–0	18–0
T47	8	2	ST	9–3	–	–	9–3	18–6
T48	8	2	ST	9–5	–	–	9–5	18–10
T49	8	2	ST	9–8	–	–	9–8	19–4
T50	8	2	ST	9–10	–	–	9–10	19–8
T51	8	2	ST	10–0	–	–	10–0	20–0
T52	8	2	ST	10–3	–	–	10–3	20–6
T53	8	2	ST	10–5	–	–	10–5	20–10
T54	8	2	ST	10–8	–	–	10–8	21–4
T55	8	2	ST	10–10	–	–	10–10	21–8
T56	8	2	ST	11–0	–	–	11–0	22–0
T57	8	2	ST	11–3	–	–	11–3	22–6
T58	8	2	ST	11–5	–	–	11–5	22–10
T59	8	2	ST	11–8	–	–	11–8	23–4
T60	8	2	ST	11–10	–	–	11–10	23–8
T61	8	2	ST	12–1	–	–	12–1	24–2
T62	8	2	ST	12–3	–	–	12–3	24–6
T63	8	2	ST	12–5	–	–	12–5	24–10
T64	8	2	ST	12–8	–	–	12–8	25–4
T65	8	2	ST	12–10	–	–	12–10	25–8
T66	8	2	ST	13–1	–	–	13–1	26–2
T67	8	2	ST	13–3	–	–	13–3	26–6
T68	8	2	ST	13–5	–	–	13–5	26–10
T69	8	2	ST	13–8	–	–	13–8	27–4
T70	8	2	ST	13–10	–	–	13–10	27–8
T71	8	2	ST	14–1	–	–	14–1	28–2
T72	8	2	ST	14–3	–	–	14–3	28–6
T73	8	2	ST	14–5	–	–	14–5	28–10
T74	8	2	ST	14–8	–	–	14–8	29–4
T75	8	2	ST	14–10	–	–	14–10	29–8
T76	8	2	ST	15–1	–	–	15–1	30–2
T77	8	2	ST	15–3	–	–	15–3	30–6
T78	8	2	ST	15–5	–	–	15–5	30–10
T79	8	2	ST	15–8	–	–	15–8	31–4
T80	8	2	ST	15–10	–	–	15–10	31–8
T81	8	2	ST	16–1	–	–	16–1	32–2
T82	8	22	ST	16–3	–	–	16–3	357–6
T83	8	2	H	2–3	–	–	2–3	4–6
T84	8	2	H	2–8	–	–	2–8	5–4
T85	8	2	H	3–1	–	–	3–1	6–2
T86	8	2	H	3–5	–	–	3–5	6–10
T87	8	2	H	3–10	–	–	3–10	7–8
T88	8	2	H	4–3	–	–	4–3	8–6
T89	8	2	H	4–8	–	–	4–8	9–4

Mark	Size (Bar #)	Quantity	Type	B (ft) (in)	C (ft) (in)	D (ft) (in)	Length (ft) (in)	Total Length (ft) (in)
T90	8	2	H	5–0	–	–	5–0	10–0
T91	8	2	H	5–5	–	–	5–5	10–10
T92	8	2	H	5–10	–	–	5–10	11–8
T93	8	2	H	6–3	–	–	6–3	12–6
T94	8	2	H	6–7	–	–	6–7	13–2
T95	8	2	H	7–0	–	–	7–0	14–0
T96	8	2	H	7–5	–	–	7–5	14–10
T97	8	2	H	7–10	–	–	7–10	15–8
T98	8	2	H	8–2	–	–	8–2	16–4
T99	8	2	H	8–7	–	–	8–7	17–2
T100	8	2	ST	7–0	–	–	7–0	14–0
T101	8	2	ST	7–5	–	–	7–5	14–10
T102	8	2	ST	7–10	–	–	7–10	15–8
T103	8	2	ST	8–2	–	–	8–2	16–4
T104	8	2	ST	8–7	–	–	8–7	17–2
T105	8	2	ST	9–0	–	–	9–0	18–0
T106	8	2	ST	9–5	–	–	9–5	18–10
T107	8	2	ST	9–9	–	–	9–9	19–6
T108	8	2	ST	10–2	–	–	10–2	20–4
T109	8	2	ST	10–7	–	–	10–7	21–2
T110	8	2	ST	11–0	–	–	11–0	22–0
T111	8	2	ST	11–5	–	–	11–5	22–10
T112	8	2	ST	11–9	–	–	11–9	23–6
T113	8	2	ST	12–2	–	–	12–2	24–4
T114	8	2	ST	12–7	–	–	12–7	25–2
T115	8	2	ST	13–0	–	–	13–0	26–0
T116	8	2	ST	13–5	–	–	13–5	26–10
T117	8	2	ST	13–9	–	–	13–9	27–6
T118	8	2	ST	14–2	–	–	14–2	28–4
T119	8	2	ST	14–7	–	–	14–7	29–2
T120	8	2	ST	15–0	–	–	15–0	30–0
T121	8	2	ST	15–4	–	–	15–4	30–8
T122	8	2	ST	15–9	–	–	15–9	31–6
T123	8	12	ST	16–2	–	–	16–2	194–0
T124	8	114	BTH	4–10	1–0	–	5–10	665–0
T125	8	58	H	4–10	1–0	–	5–10	338–4
T126	6	4	ST	49–5	–	–	49–5	197–8
T127	6	4	ST	45–11	–	–	45–11	183–8
T128	6	4	ST	44–0	–	–	44–0	176–0
T129	6	4	ST	42–1	–	–	42–1	168–4
T130	6	4	ST	40–3	–	–	40–3	161–0
T131	6	4	ST	38–4	–	–	38–4	153–4
T132	6	4	ST	36–6	–	–	36–6	146–0
T133	6	4	ST	34–7	–	–	34–7	138–4
T134	6	4	ST	32–8	–	–	32–8	130–8
T135	6	4	ST	30–10	–	–	30–10	123–4
T136	6	4	ST	28–11	–	–	28–11	115–8
T137	6	4	ST	27–0	–	–	27–0	108–0
T138	6	4	ST	25–2	–	–	25–2	100–8
T139	6	4	ST	23–3	–	–	23–3	93–0
T140	6	4	ST	21–4	–	–	21–4	85–4
T141	6	4	ST	19–6	–	–	19–6	78–0
T142	6	4	ST	17–7	–	–	17–7	70–4
T143	6	4	ST	15–8	–	–	15–8	62–8
T144	6	4	ST	13–1	–	–	13–1	52–4
T145	6	4	ST	10–7	–	–	10–7	42–4
T146	6	4	ST	8–1	–	–	8–1	32–4
T147	6	4	ST	5–7	–	–	5–7	22–4
T148	6	4	ST	3–0	–	–	3–0	12–0
T149	6	4	ST	0–6	–	–	0–6	2–0
T157	6	4	ST	3–2	–	–	3–2	12–8
T158	6	4	ST	3–7	–	–	3–7	14–4
T159	6	4	ST	4–0	–	–	4–0	16–0
T160	6	4	ST	4–5	–	–	4–5	17–8
T161	6	4	ST	4–10	–	–	4–10	19–4
T162	6	4	ST	5–3	–	–	5–3	21–0
T163	8	198	ST	16–3	–	–	16–3	3217–6
T164	8	198	BTH	4–10	1–0	–	5–10	1155–0
T165	8	100	ST	16–2	–	–	16–2	1616–8
T166	8	100	H	4–10	1–0	–	5–10	583–4
T167	8	100	ST	5–4	–	–	5–4	533–4
T168	8	100	ST	5–4	–	–	5–4	533–4
T169	6	4	ST	49–0	–	–	49–0	196–0
T170	6	92	ST	51–5	–	–	51–5	4730–4

NOTES:
1. REFER TO S–32 FOR BAR TYPES.

Prepared for Halff Associates, Inc.
Texas Registered Engineering Firm F–2144

MICHAEL RAY ROBERTSON
59701
LICENSED
PROFESSIONAL ENGINEER
STATE OF TEXAS

04/24/15

DESIGNED BY: LB
DRAWN BY: JAW
CHECKED BY: MRR
FILE NAME: ST–LAB–SH–TRNG.dwg
DATE CHECKED: 4/23/2015

STRUCTURAL LABYRINTH TRAINING WALL REINFORCEMENT TABLE

FLOODWATER RETARDING STRUCTURE NO. 6 REHABILITATION
PLUM CREEK WATERSHED
OF THE
PLUM CREEK WATER, TEXAS

United States Department of Agriculture
Natural Resources Conservation Service

REVISIONS DATE

DRAWING NO.
TX–EN–0650

SHEET
S–8

Drawing Name: N:\ST\ST–LAB–SH–TRNG.dwg
Last Saved: 4/23/2015 11:55 AM Saved By: 02424

Plot Date: 4/23/2015 5:21 PM Plot By: 02424 Filename: N:\ST\ST–LAB–SH–TRNG.dwg

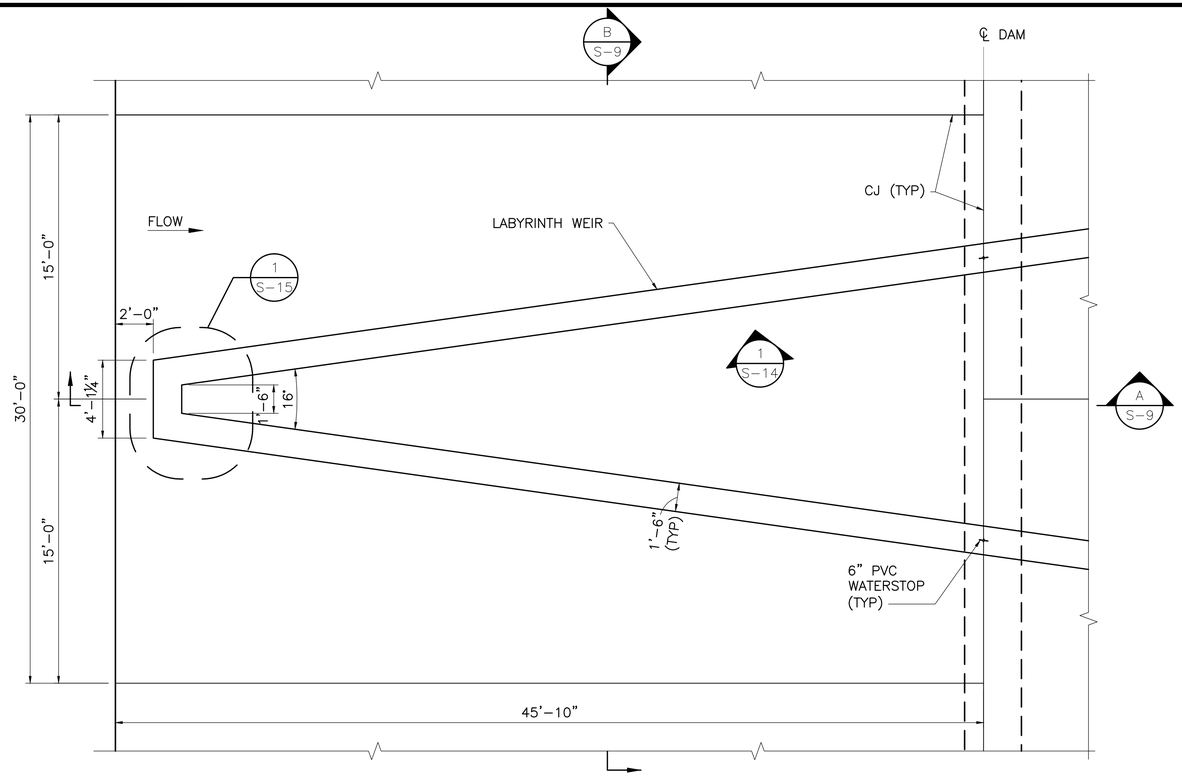

PARTIAL PLAN

0 1' 2' 4' 8'
1/4"=1'-0"

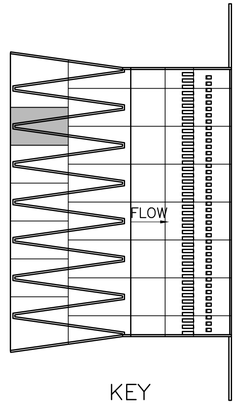

KEY
N.T.S.

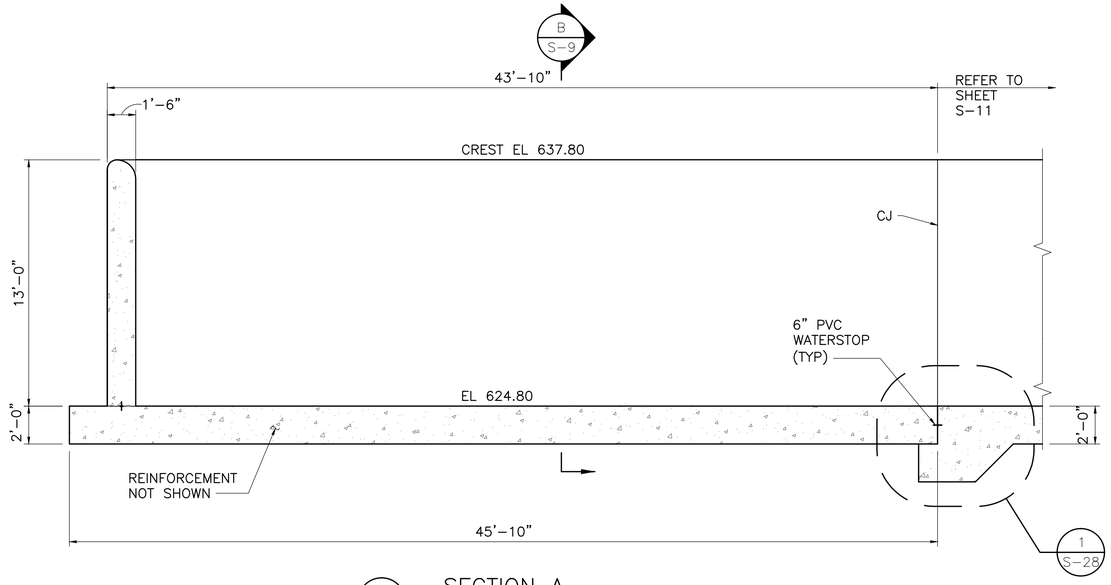

A
S-9
SECTION A

0 1' 2' 4' 8'
1/4"=1'-0"

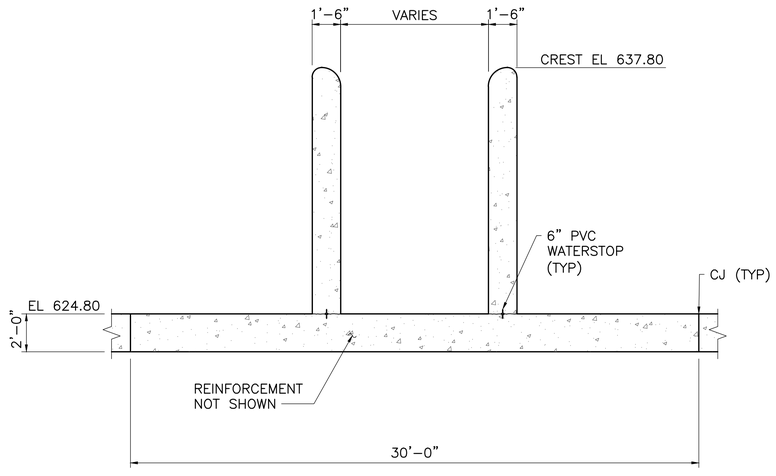

B
S-9
SECTION B

0 1' 2' 4' 8'
1/4"=1'-0"

Freese and Nichols, Inc.
Texas Registered Engineering Firm F-2144

STATE OF TEXAS
MICHAEL RAY ROBERTSON
59701
REGISTERED
PROFESSIONAL ENGINEER
04/24/15

DESIGNED BY: LB
DRAWN BY: JAW
CHECKED BY: MRR
FILE NAME: ST-LAB-PL-PANELB.dwg
DATE CHECKED: 4/23/2015

STRUCTURAL
LABYRINTH WEIR PARTIAL PLAN AND SECTIONS

FLOODWATER RETARDING STRUCTURE NO. 6 REHABILITATION
PLUM CREEK WATERSHED
OF THE
PLUM CREEK WATER, TEXAS

NRCS
United States Department of Agriculture
Natural Resources Conservation Service

REVISIONS DATE

DRAWING NO.
TX-EN-0650

SHEET
S-9

11/19/2014 2:15:41 P.M. LTS: 1.00 PSLTS: 1 TWIST: 0.0, 0.0, 0.0, 0.0, 0.0, 0.0, 0.0, 0.0
REFERENCE FILE: N:\STANDARD\2012\TX-NRC-FULL BORDER

Plot Date: 4/23/2015 5:22 PM Plot By: 02424 Filename: N:\ST\ST-LAB-PL-PANELB.dwg

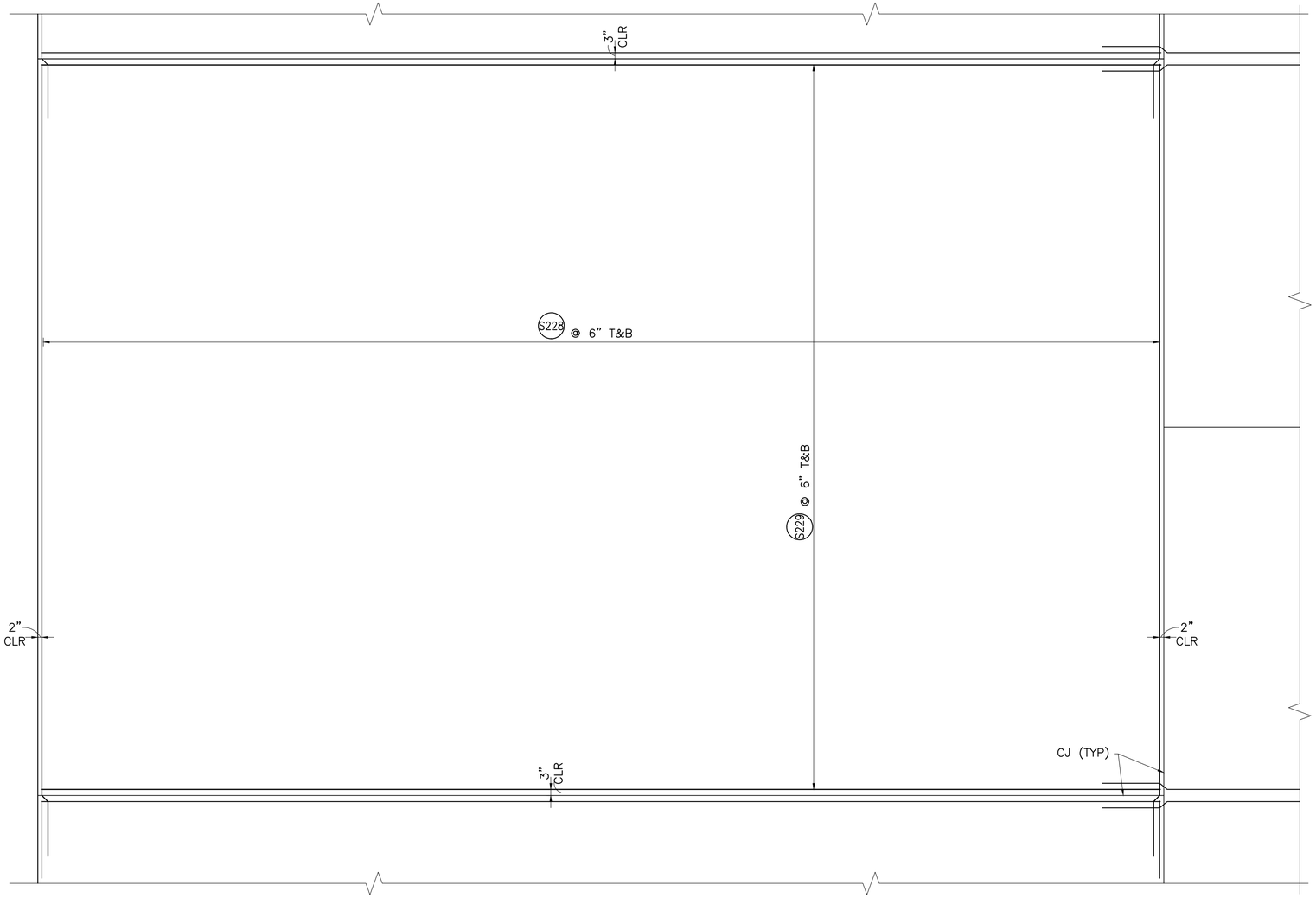

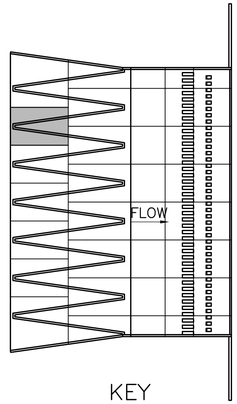

KEY
N.T.S.



PARTIAL REINFORCING PLAN

0 1' 2' 4'
3/8"=1'-0

Freese and Nichols, Inc.
Texas Registered Engineering Firm F-2144

STATE OF TEXAS
MICHAEL RAY ROBERTSON
59701
REGISTERED
PROFESSIONAL ENGINEER
04/24/15

DESIGNED BY: LB
DRAWN BY: JAW
CHECKED BY: MRR
FILE NAME: ST-LAB-PL-RENFB.dwg
DATE CHECKED: 4/23/2015

STRUCTURAL
LABYRINTH WEIR PARTIAL REINFORCEMENT PLAN
FLOODWATER RETARDING STRUCTURE NO. 6 REHABILITATION
PLUM CREEK WATERSHED
OF THE
PLUM CREEK WATER, TEXAS

NRCS
United States Department of Agriculture
Natural Resources Conservation Service

REVISIONS DATE

DRAWING NO.
TX-EN-0650

SHEET
S-10

Last Saved: 4/23/2015 12:08 PM Saved By: 02424

Plot Date: 4/23/2015 5:22 PM Plot By: 02424 Filename: N:\ST\ST-LAB-PL-RENFB.dwg

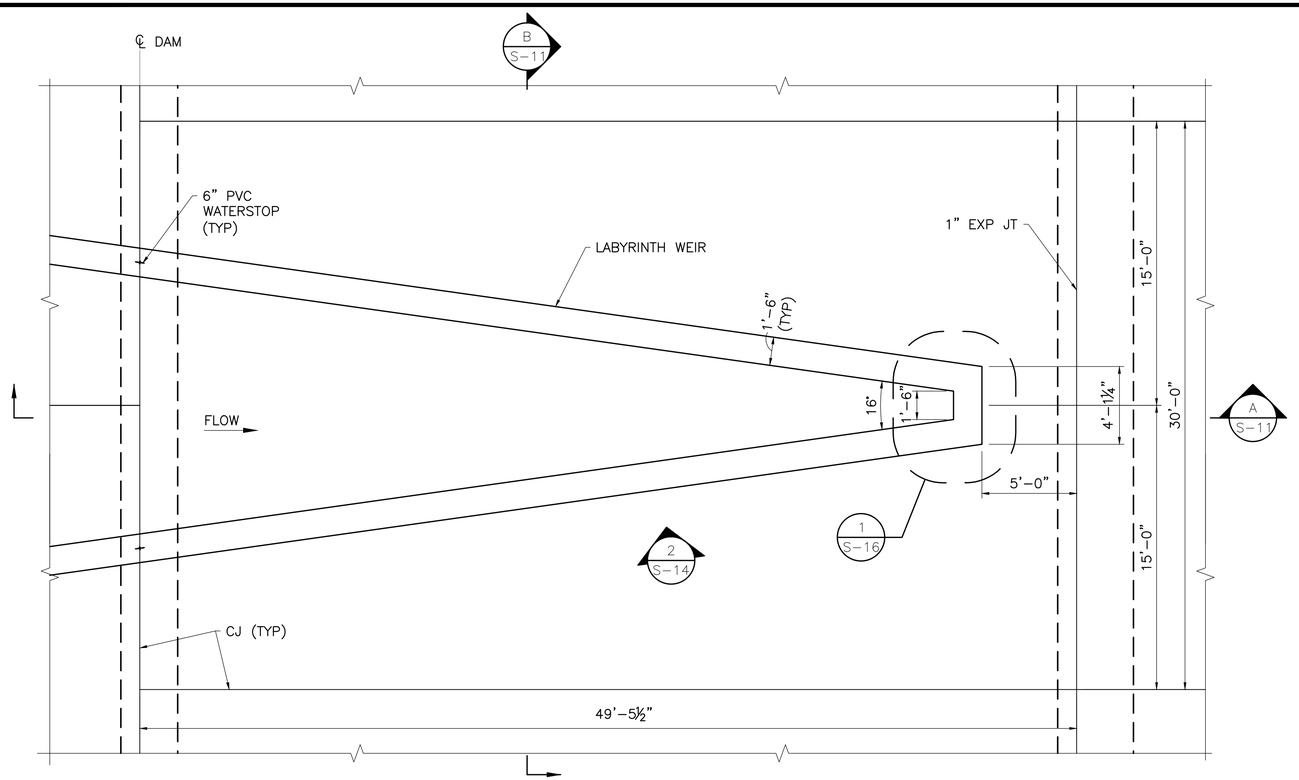

PARTIAL PLAN

0 1' 2' 4' 8'
1/4"=1'-0"

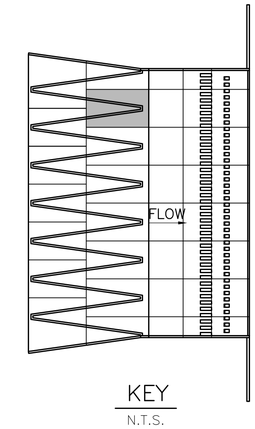

KEY
N.T.S.

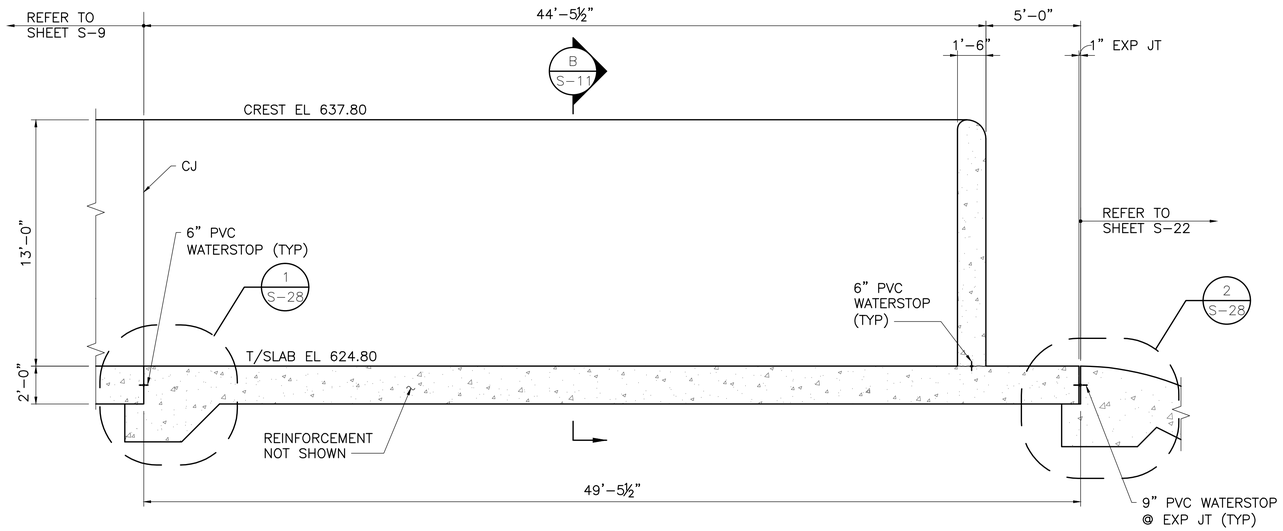

A S-11 SECTION A

0 1' 2' 4' 8'
1/4"=1'-0"

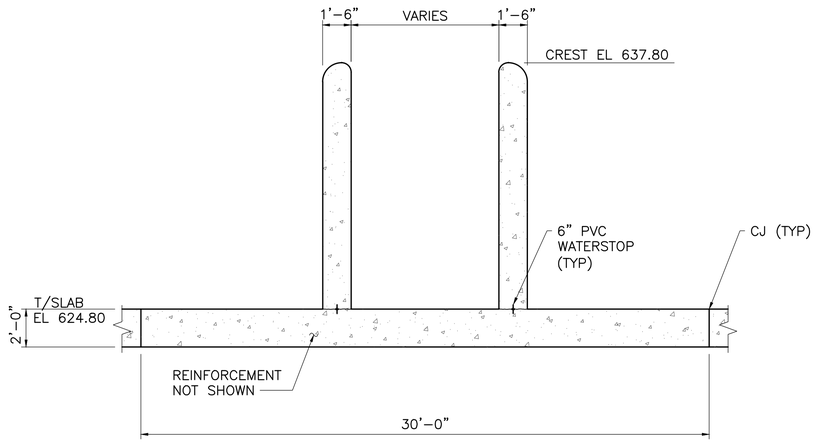

B S-11 SECTION B

0 1' 2' 4' 8'
1/4"=1'-0"

Freese and Nichols, Inc.
Texas Registered Engineering Firm F-2144

STATE OF TEXAS
MICHAEL RAY ROBERTSON
59701
REGISTERED PROFESSIONAL ENGINEER
04/24/15

DESIGNED BY: LB
DRAWN BY: JAW
CHECKED BY: MRR
FILE NAME: ST-LAB-PL-PANELC.dwg
DATE CHECKED: 4/23/2015

STRUCTURAL
LABYRINTH WEIR PARTIAL PLAN AND SECTIONS

FLOODWATER RETARDING STRUCTURE NO. 6 REHABILITATION
PLUM CREEK WATERSHED
OF THE
PLUM CREEK WATER, TEXAS

NRCS
United States Department of Agriculture
Natural Resources Conservation Service

REVISIONS DATE

DRAWING NO.
TX-EN-0650

SHEET
S-11

11/25/2014 3:43:11 P.M. LTS: 1.00 PSLTS: 1 TWIST: 0.0, 0.0, 0.0, 0.0, 0.0, 0.0, 0.0, 0.0, 0.0, 0.0
2 REFERENCE FILES: \BASE\ST-ENG-STAMP and N:\STANDARD\2012\TX-NRC-FULL BORDER

Plot Date: 4/23/2015 5:22 PM Plot By: 02424 Filename: N:\ST\ST-LAB-PL-PANELC.dwg

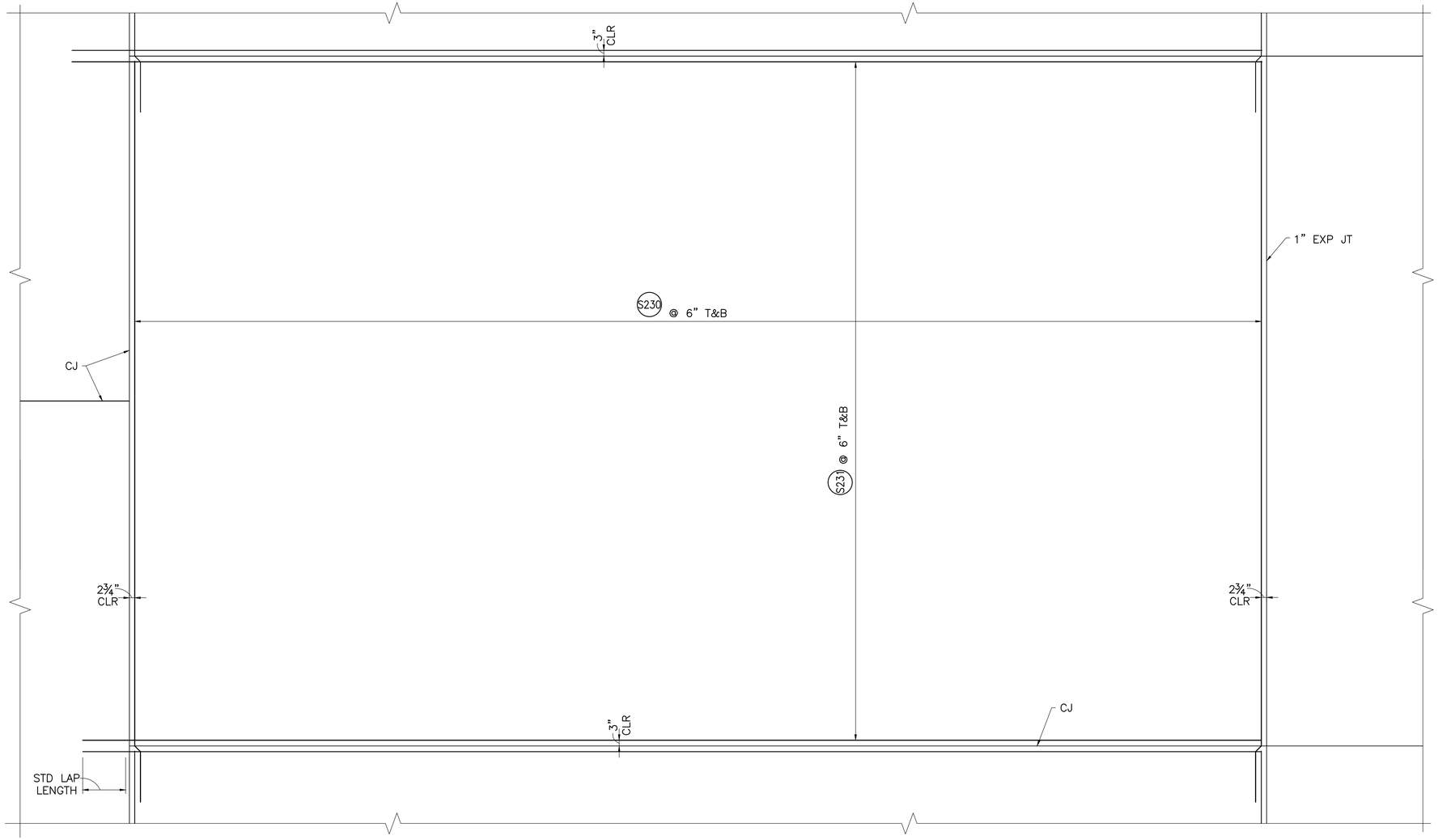

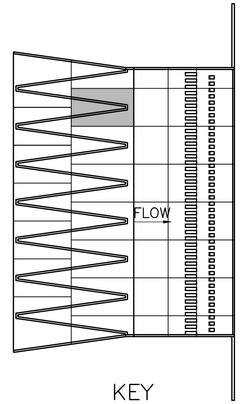

KEY
N.T.S.

NORTH

PARTIAL REINFORCING PLAN

0 1' 2' 4'
3/8"=1'-0

Freese and Nichols, Inc.
Texas Registered Engineering Firm F-2144

STATE OF TEXAS
MICHAEL RAY ROBERTSON
59701
REGISTERED
PROFESSIONAL ENGINEER
04/24/15

DESIGNED BY: LB
DRAWN BY: JAW
CHECKED BY: MRR
FILE NAME: ST-LAB-PL-RENFC.dwg
DATE CHECKED: 4/23/2015

STRUCTURAL
LABYRINTH WEIR PARTIAL REINFORCEMENT PLAN

FLOODWATER RETARDING STRUCTURE NO. 6 REHABILITATION
PLUM CREEK WATERSHED
OF THE
PLUM CREEK WATER, TEXAS

NRCS
United States Department of Agriculture
Natural Resources Conservation Service

REVISIONS DATE

DRAWING NO.
TX-EN-0650

SHEET
S-12

Last Saved: 4/23/2015 12:16 PM Saved By: 02424

Plot Date: 4/23/2015 5:23 PM Plot By: 02424 Filename: N:\ST\ST-LAB-PL-RENFC.dwg

Mark	Size (Bar #)	Quantity	Type	B (ft) (in)	C (ft) (in)	D (ft) (in)	Length (ft) (in)	Total Length (ft) (in)
S1	7	4	ST	46–1	–	–	46–1	184–4
S2	7	4	ST	49–10	–	–	49–10	199–4
S3	7	4	ST	51–5	–	–	51–5	205–8
S4	7	4	ST	51–5	–	–	51–5	205–8
S5	7	4	ST	51–4	–	–	51–4	205–4
S6	7	4	ST	51–3	–	–	51–3	205–0
S7	7	4	ST	51–2	–	–	51–2	204–8
S8	7	4	ST	51–1	–	–	51–1	204–4
S9	7	4	ST	51–0	–	–	51–0	204–0
S10	7	4	ST	50–11	–	–	50–11	203–8
S11	7	4	ST	50–11	–	–	50–11	203–8
S12	7	4	ST	50–10	–	–	50–10	203–4
S13	7	4	ST	50–9	–	–	50–9	203–0
S14	7	4	ST	50–8	–	–	50–8	202–8
S15	7	4	ST	50–7	–	–	50–7	202–4
S16	7	4	ST	50–6	–	–	50–6	202–0
S17	7	4	ST	50–6	–	–	50–6	202–0
S18	7	4	ST	50–5	–	–	50–5	201–8
S19	7	4	ST	50–4	–	–	50–4	201–4
S20	7	4	ST	50–3	–	–	50–3	201–0
S21	7	4	ST	50–2	–	–	50–2	200–8
S22	7	4	ST	50–1	–	–	50–1	200–4
S23	7	4	ST	50–1	–	–	50–1	200–4
S24	7	4	ST	50–0	–	–	50–0	200–0
S25	7	4	ST	49–11	–	–	49–11	199–8
S26	7	4	ST	49–10	–	–	49–10	199–4
S27	7	4	ST	49–9	–	–	49–9	199–0
S28	7	4	ST	49–8	–	–	49–8	198–8
S29	7	4	ST	49–7	–	–	49–7	198–4
S30	7	4	ST	49–7	–	–	49–7	198–4
S31	7	4	ST	49–6	–	–	49–6	198–0
S32	7	4	ST	49–5	–	–	49–5	197–8
S33	7	4	ST	49–4	–	–	49–4	197–4
S34	7	4	ST	49–3	–	–	49–3	197–0
S35	7	4	ST	49–2	–	–	49–2	196–8
S36	7	4	ST	49–2	–	–	49–2	196–8
S37	7	4	ST	49–1	–	–	49–1	196–4
S38	7	4	ST	49–0	–	–	49–0	196–0
S39	7	4	ST	48–11	–	–	48–11	195–8
S40	7	4	ST	48–10	–	–	48–10	195–4
S41	7	4	ST	48–9	–	–	48–9	195–0
S42	7	4	ST	48–9	–	–	48–9	195–0
S43	7	4	ST	48–8	–	–	48–8	194–8
S44	7	4	ST	48–7	–	–	48–7	194–4
S45	7	4	ST	48–6	–	–	48–6	194–0
S46	7	4	ST	48–5	–	–	48–5	193–8
S47	7	4	ST	48–4	–	–	48–4	193–4
S48	7	4	ST	48–3	–	–	48–3	193–0
S49	7	4	ST	48–3	–	–	48–3	193–0
S50	7	4	ST	48–2	–	–	48–2	192–8
S51	7	4	ST	48–1	–	–	48–1	192–4
S52	7	4	ST	48–0	–	–	48–0	192–0
S53	7	4	ST	47–11	–	–	47–11	191–8
S54	7	4	ST	47–10	–	–	47–10	191–4
S55	7	4	ST	47–10	–	–	47–10	191–4
S56	7	4	ST	47–9	–	–	47–9	191–0
S57	7	4	ST	47–8	–	–	47–8	190–8
S58	7	4	ST	47–7	–	–	47–7	190–4
S59	7	4	ST	47–6	–	–	47–6	190–0
S60	7	4	ST	47–5	–	–	47–5	189–8
S61	7	4	ST	47–4	–	–	47–4	189–4
S62	7	4	ST	47–4	–	–	47–4	189–4
S63	7	4	ST	47–3	–	–	47–3	189–0
S64	7	4	ST	47–2	–	–	47–2	188–8
S65	7	4	ST	47–1	–	–	47–1	188–4
S66	7	4	ST	47–0	–	–	47–0	188–0
S67	7	4	ST	46–11	–	–	46–11	187–8
S68	7	4	ST	46–11	–	–	46–11	187–8
S69	7	4	ST	46–10	–	–	46–10	187–4
S70	7	4	ST	46–9	–	–	46–9	187–0
S71	7	4	ST	46–8	–	–	46–8	186–8
S72	7	4	ST	46–7	–	–	46–7	186–4
S73	7	4	ST	46–6	–	–	46–6	186–0
S74	7	4	ST	46–6	–	–	46–6	186–0
S75	7	4	ST	46–5	–	–	46–5	185–8
S76	7	4	ST	46–4	–	–	46–4	185–4
S77	7	4	ST	46–3	–	–	46–3	185–0
S78	7	4	ST	46–2	–	–	46–2	184–8
S79	7	4	ST	46–1	–	–	46–1	184–4
S80	7	4	ST	46–0	–	–	46–0	184–0
S81	7	4	ST	46–0	–	–	46–0	184–0
S82	7	4	ST	45–11	–	–	45–11	183–8
S83	7	4	ST	45–10	–	–	45–10	183–4
S84	7	4	ST	45–9	–	–	45–9	183–0
S85	7	4	ST	45–8	–	–	45–8	182–8
S86	7	4	ST	45–7	–	–	45–7	182–4
S87	7	4	ST	45–7	–	–	45–7	182–4
S88	7	4	ST	45–6	–	–	45–6	182–0
S89	7	4	ST	45–5	–	–	45–5	181–8

Mark	Size (Bar #)	Quantity	Type	B (ft) (in)	C (ft) (in)	D (ft) (in)	Length (ft) (in)	Total Length (ft) (in)
S90	7	4	ST	45–4	–	–	45–4	181–4
S91	7	4	ST	45–3	–	–	45–3	181–0
S92	7	4	ST	45–2	–	–	45–2	180–8
S93	7	4	BT2	5–3	3–7	–	8–10	35–4
S94	7	4	ST	8–10	–	–	8–10	35–4
S95	7	4	ST	1–9	–	–	1–9	7–0
S96	7	4	ST	24–10	–	–	24–10	99–4
S97	7	4	ST	28–5	–	–	28–5	113–8
S98	7	4	ST	30–0	–	–	30–0	120–0
S99	7	4	ST	29–11	–	–	29–11	119–8
S100	7	4	ST	29–10	–	–	29–10	119–4
S101	7	4	ST	29–9	–	–	29–9	119–0
S102	7	4	ST	29–9	–	–	29–9	119–0
S103	7	4	ST	29–8	–	–	29–8	118–8
S104	7	4	ST	29–7	–	–	29–7	118–4
S105	7	4	ST	29–6	–	–	29–6	118–0
S106	7	4	ST	29–5	–	–	29–5	117–8
S107	7	4	ST	29–4	–	–	29–4	117–4
S108	7	4	ST	29–4	–	–	29–4	117–4
S109	7	4	ST	29–3	–	–	29–3	117–0
S110	7	4	ST	29–2	–	–	29–2	116–8
S111	7	4	ST	29–1	–	–	29–1	116–4
S112	7	4	ST	29–0	–	–	29–0	116–0
S113	7	4	ST	28–11	–	–	28–11	115–8
S114	7	4	ST	28–11	–	–	28–11	115–8
S115	7	4	ST	28–10	–	–	28–10	115–4
S116	7	4	ST	28–9	–	–	28–9	115–0
S117	7	4	ST	28–8	–	–	28–8	114–8
S118	7	4	ST	28–7	–	–	28–7	114–4
S119	7	4	ST	28–6	–	–	28–6	114–0
S120	7	4	ST	28–5	–	–	28–5	113–8
S121	7	4	ST	28–5	–	–	28–5	113–8
S122	7	4	ST	28–4	–	–	28–4	113–4
S123	7	4	ST	28–3	–	–	28–3	113–0
S124	7	4	ST	28–2	–	–	28–2	112–8
S125	7	4	ST	28–1	–	–	28–1	112–4
S126	7	4	ST	28–0	–	–	28–0	112–0
S127	7	4	ST	28–0	–	–	28–0	112–0
S128	7	4	ST	27–11	–	–	27–11	111–8
S129	7	4	ST	27–10	–	–	27–10	111–4
S130	7	4	ST	27–9	–	–	27–9	111–0
S131	7	4	ST	27–8	–	–	27–8	110–8
S132	7	4	ST	27–7	–	–	27–7	110–4
S133	7	4	ST	27–7	–	–	27–7	110–4
S134	7	4	ST	27–6	–	–	27–6	110–0
S135	7	4	ST	27–5	–	–	27–5	109–8
S136	7	4	ST	27–4	–	–	27–4	109–4
S137	7	4	ST	27–3	–	–	27–3	109–0
S138	7	4	ST	27–2	–	–	27–2	108–8
S139	7	4	ST	27–1	–	–	27–1	108–4
S140	7	4	ST	27–1	–	–	27–1	108–4
S141	7	4	ST	27–0	–	–	27–0	108–0
S142	7	4	ST	26–11	–	–	26–11	107–8
S143	7	4	ST	26–10	–	–	26–10	107–4
S144	7	4	ST	26–9	–	–	26–9	107–0
S145	7	4	ST	26–8	–	–	26–8	106–8
S146	7	4	ST	26–8	–	–	26–8	106–8
S147	7	4	ST	26–7	–	–	26–7	106–4
S148	7	4	ST	26–6	–	–	26–6	106–0
S149	7	4	ST	26–5	–	–	26–5	105–8
S150	7	4	ST	26–4	–	–	26–4	105–4
S151	7	4	ST	26–3	–	–	26–3	105–0
S152	7	4	ST	26–2	–	–	26–2	104–8
S153	7	4	ST	26–2	–	–	26–2	104–8
S154	7	4	ST	26–1	–	–	26–1	104–4
S155	7	4	ST	26–0	–	–	26–0	104–0
S156	7	4	ST	25–11	–	–	25–11	103–8
S157	7	4	ST	25–10	–	–	25–10	103–4
S158	7	4	ST	25–9	–	–	25–9	103–0
S159	7	4	ST	25–9	–	–	25–9	103–0
S160	7	4	ST	25–8	–	–	25–8	102–8
S161	7	4	ST	25–7	–	–	25–7	102–4
S162	7	4	ST	25–6	–	–	25–6	102–0
S163	7	4	ST	25–5	–	–	25–5	101–8
S164	7	4	ST	25–4	–	–	25–4	101–4
S165	7	4	ST	25–4	–	–	25–4	101–4
S166	7	4	ST	25–3	–	–	25–3	101–0
S167	7	4	ST	25–2	–	–	25–2	100–8
S168	7	4	ST	25–1	–	–	25–1	100–4
S169	7	4	ST	25–0	–	–	25–0	100–0
S170	7	4	ST	24–11	–	–	24–11	99–8
S171	7	4	ST	24–10	–	–	24–10	99–4
S172	7	4	ST	24–10	–	–	24–10	99–4
S173	7	4	ST	24–9	–	–	24–9	99–0
S174	7	4	ST	24–8	–	–	24–8	98–8
S175	7	4	ST	24–7	–	–	24–7	98–4
S176	7	4	ST	24–6	–	–	24–6	98–0
S177	7	4	ST	24–5	–	–	24–5	97–8
S178	7	4	ST	24–5	–	–	24–5	97–8
S179	7	4	ST	24–4	–	–	24–4	97–4

Mark	Size (Bar #)	Quantity	Type	B (ft) (in)	C (ft) (in)	D (ft) (in)	Length (ft) (in)	
S180	7	4	ST	24–3	–	–	24–3	
S181	7	4	ST	24–2	–	–	24–2	
S182	7	4	ST	24–1	–	–	24–1	
S183	7	4	ST	24–0	–	–	24–0	
S184	7	4	ST	24–0	–	–	24–0	
S185	7	4	ST	23–11	–	–	23–11	
S186	7	4	ST	23–10	–	–	23–10	
S187	7	4	ST	23–9	–	–	23–9	
S188	7	4	ST	23–8	–	–	23–8	
S189	7	4	ST	23–7	–	–	23–7	
S190	7	4	ST	23–6	–	–	23–6	
S191	7	4	ST	23–6	–	–	23–6	
S192	7	4	ST	23–5	–	–	23–5	
S193	7	4	BT2	5–3	3–7	–	8–10	
S194	7	4	ST	3–0	–	–	3–0	
S195	7	4	ST	6–7	–	–	6–7	
S196	7	4	ST	10–2	–	–	10–2	
S197	7	4	ST	13–9	–	–	13–9	
S198	7	4	ST	17–5	–	–	17–5	
S199	7	4	ST	21–1	–	–	21–1	
S200	7	4	ST	24–8	–	–	24–8	
S201	7	4	ST	28–4	–	–	28–4	
S202	7	4	ST	31–11	–	–	31–11	
S203	7	4	ST	35–7	–	–	35–7	
S204	7	4	ST	39–2	–	–	39–2	
S206	7	4	ST	42–8	–	–	42–8	
S208	7	4	ST	46–3	–	–	46–3	
S210	7	4	ST	49–10	–	–	49–10	
S212	7	4	ST	53–5	–	–	53–5	
S213	7	320	ST	45–6	–	–	45–6	
S214	7	4	ST	45–11	–	–	45–11	
S215	7	4	ST	14–7	–	–	14–7	
S216	7	4	ST	18–3	–	–	18–3	
S217	7	4	ST	21–10	–	–	21–10	
S218	7	4	ST	25–5	–	–	25–5	
S219	7	4	ST	29–1	–	–	29–1	
S220	7	4	ST	32–8	–	–	32–8	
S221	7	4	ST	36–3	–	–	36–3	
S222	7	4	ST	39–11	–	–	39–11	
S223	7	4	ST	43–6	–	–	43–6	
S224	7	4	ST	47–1	–	–	47–1	
S225	7	4	ST	50–9	–	–	50–9	
S226	7	156	ST	51–10	–	–	51–10	
S227	7	4	ST	47–9	–	–	47–9	
S228	7	920	ST	33–10	–	–	33–10	
S229	7	600	ST	45–6	–	–	45–6	
S230	7	1188	ST	33–10	–	–	33–10	
S231	7	720	ST	53–1	–	–	53–1	

NOTES:
1. REFER TO S–32 FOR BAR TYPES.

Freese and Nichols, Inc.
Texas Registered Engineering Firm F–2144
STATE OF TEXAS
MICHAEL RAY ROBERTSON
59701
REGISTERED PROFESSIONAL ENGINEER
04/24/15

DESIGNED BY: LB
DRAWN BY: JAW
CHECKED BY: MRR
FILE NAME: ST–LAB–TB–SLAB02.dwg
DATE CHECKED: 4/23/2015

Value
LABYRINTH WEIR SLAB REINFORCEMENT TABLE
FLOODWATER RETARDING STRUCTURE NO. 6 REHABILITATION
PLUM CREEK WATERSHED
OF THE
PLUM CREEK WATER, TEXAS

NRCS
United States Department of Agriculture
Natural Resources Conservation Service

REVISIONS | DATE

DRAWING NO.
TX–EN–0650

SHEET
S–13

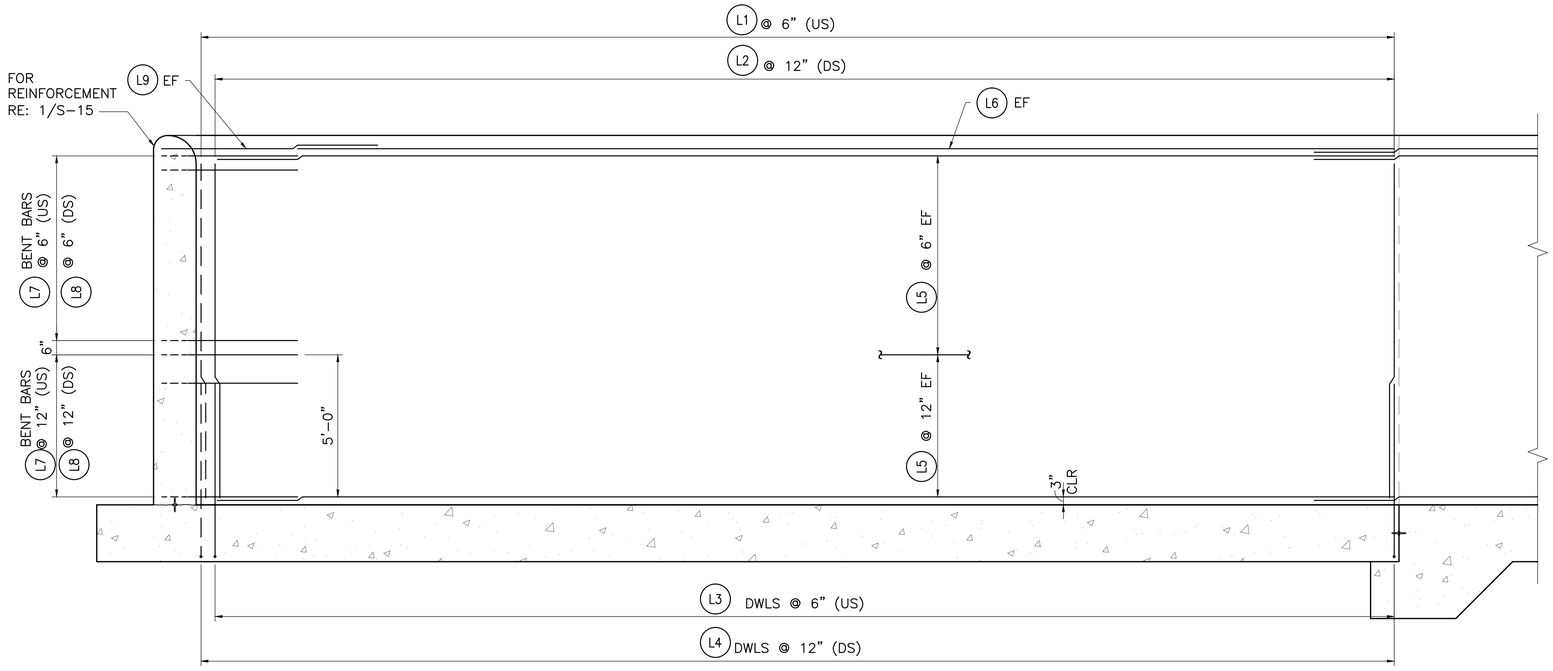

1 S-3 WEIR WALL UPSTREAM & DOWNSTREAM FACE REINFORCEMENT

0 1' 2' 4'
3/8"=1'-0

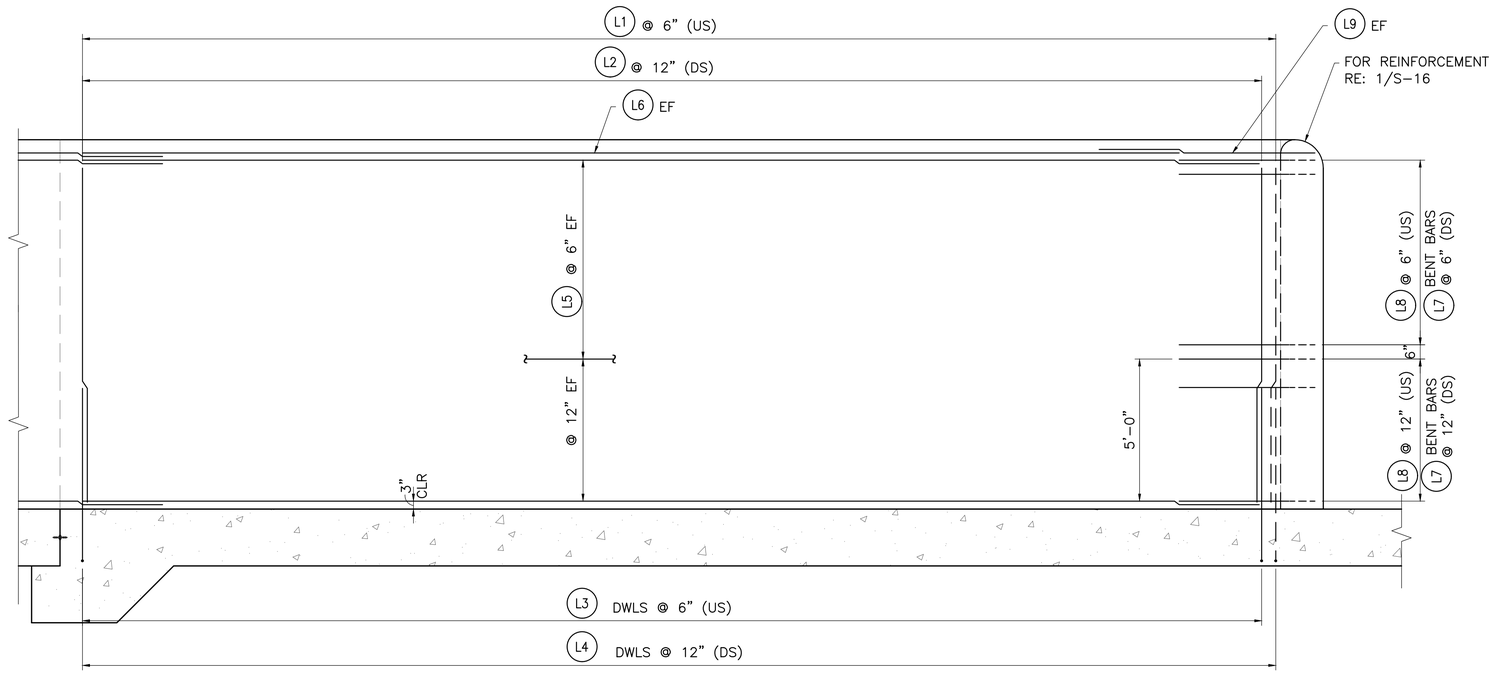

2 S-3 WEIR WALL UPSTREAM & DOWNSTREAM FACE REINFORCEMENT

0 1' 2' 4'
3/8"=1'-0

Freese and Nichols, Inc.
Texas Registered Engineering Firm F-2144

STATE OF TEXAS
MICHAEL RAY ROBERTSON
59701
REGISTERED PROFESSIONAL ENGINEER
04/24/15

DESIGNED BY: LB
DRAWN BY: JAW
CHECKED BY: MRR
FILE NAME: ST-LAB-EL-PNLA03.dwg
DATE CHECKED: 4/23/2015

STRUCTURAL
LABYRINTH WEIR ELEVATIONS

FLOODWATER RETARDING STRUCTURE NO. 6 REHABILITATION
PLUM CREEK WATERSHED
OF THE
PLUM CREEK WATER, TEXAS

NRCS
United States Department of Agriculture
Natural Resources Conservation Service

REVISIONS DATE

DRAWING NO.
TX-EN-0650

SHEET
S-14

11/19/2014 2:15:41 P.M. LTS: 1.00 PSLTS: 1 TWIST: 0.0, 0.0, 0.0, 0.0, 0.0, 0.0, 0.0, 0.0, 0.0
REFERENCE FILE: N:\STANDARD\2012\TX-NRC-FULL BORDER

Plot Date: 4/23/2015 5:23 PM Plot By: 02424 Filename: N:\ST\ST-LAB-EL-PNLA03.dwg

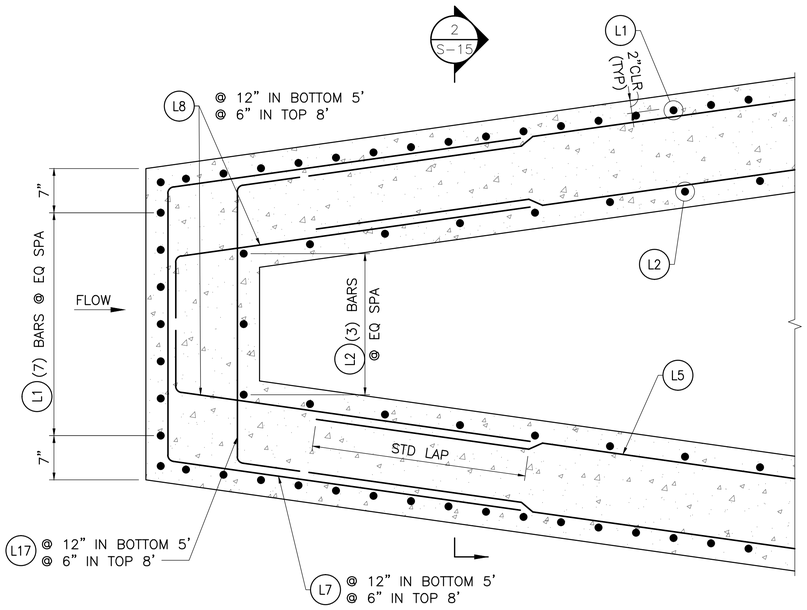

1 S-3 UPSTREAM APEX DETAIL

0 6" 1' 2'
1"=1'-0"

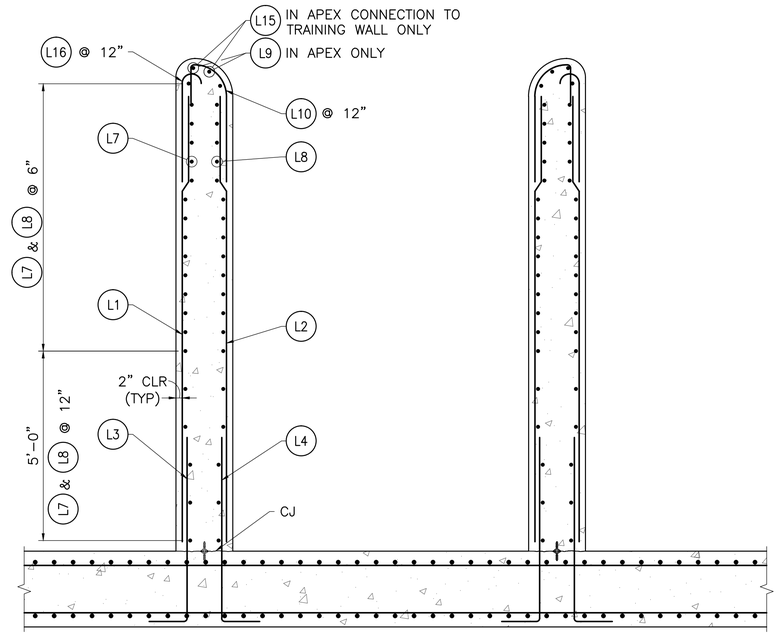

2 S-15 SECTION THROUGH APEX

0 1' 2' 4'
1/2"=1'-0"

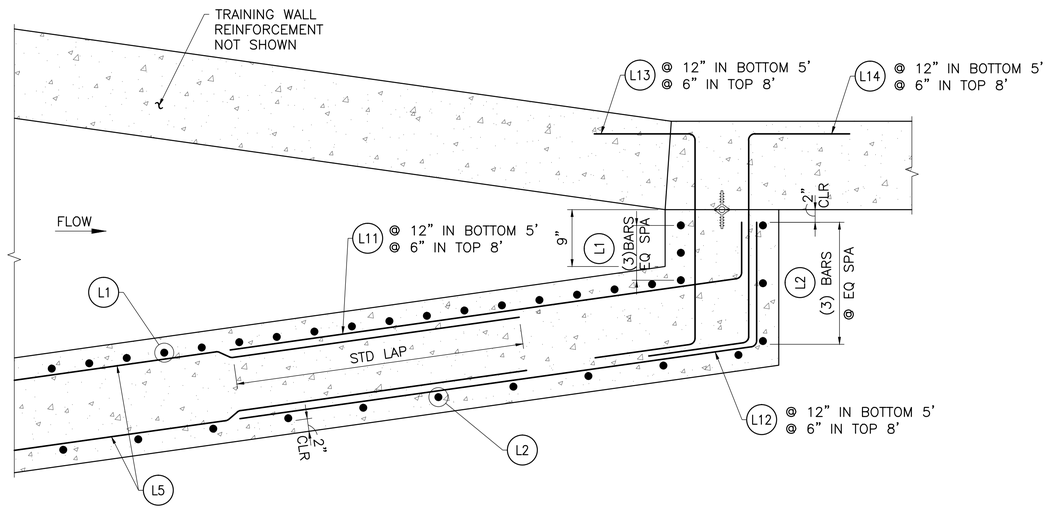

3 S-3 APEX CONNECTION TO TRAINING WALL

0 6" 1' 2'
1"=1'-0"

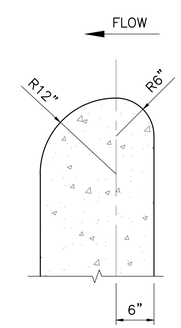

NOTE:
CREST ELEVATION SHOWN SHALL BE BUILT WITHIN ±¼". CREST PROFILE TOLERANCES SHALL BE +0"/-⅛" WHEN MEASURED NORMAL TO THE SURFACE. THESE TOLERANCES ARE NOT CUMULATIVE. REFER TO GENERAL NOTES FOR ADDITIONAL INFORMATION.

4 S-15 LABYRINTH CREST DETAIL

0 6" 1' 2'
1"=1'-0"

Freese and Nichols, Inc.
Texas Registered Engineering Firm F-2144

STATE OF TEXAS
MICHAEL RAY ROBERTSON
59701
REGISTERED
PROFESSIONAL ENGINEER
04/24/15

DESIGNED BY: LB
DRAWN BY: JAW
CHECKED BY: MRR
FILE NAME: ST-LAB-SC-PNLA02.dwg
DATE CHECKED: 4/23/2015

STRUCTURAL
LABYRINTH WEIR SECTIONS

FLOODWATER RETARDING STRUCTURE NO. 6 REHABILITATION
PLUM CREEK WATERSHED
OF THE
PLUM CREEK WATER, TEXAS

NRCS
United States Department of Agriculture
Natural Resources Conservation Service

REVISIONS DATE

DRAWING NO.
TX-EN-0650

SHEET
S-15

Last Saved: 4/23/2015 12:23 PM Saved By: 02424

Plot Date: 4/23/2015 5:23 PM Plot By: 02424 Filename: N:\ST\ST-LAB-SC-PNLA02.dwg

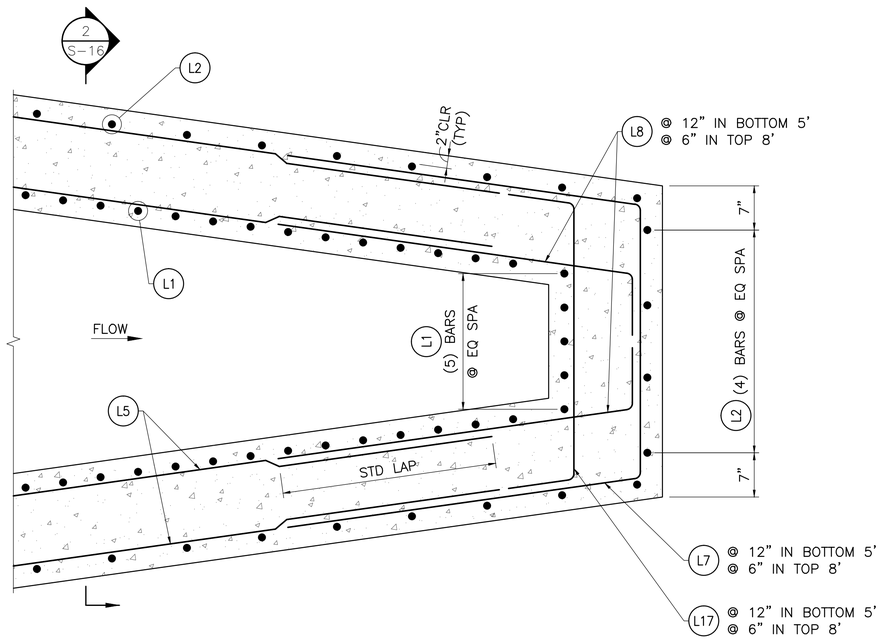

1 S-11 DOWNSTREAM APEX DETAIL

0 6" 1' 2'
1"=1'-0"

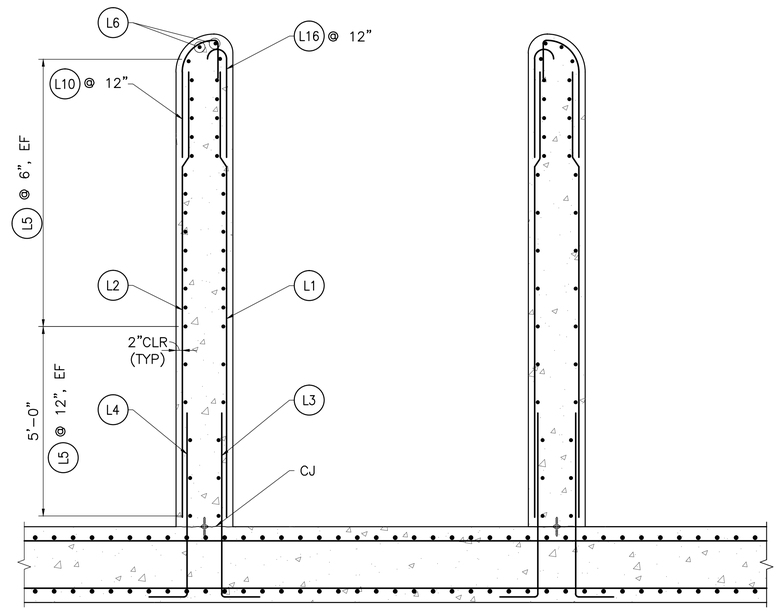

2 S-16 SECTION THROUGH WALL

0 1' 2' 4'
1/2"=1'-0"

Mark	Size (Bar #)	Quantity	Type	B (ft) (in)	C (ft) (in)	D (ft) (in)	E (ft) (in)	Length (ft) (in)	Total Length (ft) (in)	Total Weight (lb)
L1	7	2535	ST	12-3	–	–	–	12-3	31053-9	63,350
L2	7	1283	ST	12-3	–	–	–	12-3	15716-9	32,062
L3	7	2535	H	4-6	0-11	–	–	5-5	13731-3	28,012
L4	7	1283	H	4-6	0-11	–	–	5-5	6949-7	14,177
L5	6	1120	ST	44-0	–	–	–	44-0	49280-0	73,920
L6	6	56	ST	44-0	–	–	–	44-0	2464-0	3,696
L7	6	260	BB	3-7	4-8	4-8	–	12-11	3358-4	5,038
L8	6	520	BTH	6-0	0-9	–	–	6-9	3510-0	5,265
L9	6	26	BB	2-9	4-8	4-8	–	12-1	314-2	471
L10	6	1281	RH	1-4	2-0	0-10	0-10	4-2	5337-6	8,006
L11	6	40	BTH	4-0	0-9	–	–	4-9	190-0	285
L12	6	40	BTH	4-10	1-7	–	–	6-5	256-8	385
L13	6	40	BB	3-4	2-0	2-0	–	7-4	293-4	440
L14	6	40	Z	3-4	2-0	2-0	–	7-4	293-4	440
L15	6	4	BTH	4-6	1-5	–	–	5-11	23-8	36
L16	6	1281	R	1-1	2-0	0-4	–	3-1	3949-9	5,925
L17	6	260	BB	3-11	0-9	0-9	–	5-5	1408-4	2,113

NOTES:
1. REFER TO S-32 FOR BAR TYPES.

Freese and Nichols, Inc.
Texas Registered Engineering Firm F-2144

STATE OF TEXAS
MICHAEL RAY ROBERTSON
59701
REGISTERED PROFESSIONAL ENGINEER
04/24/15

DESIGNED BY: LB
DRAWN BY: JAW
CHECKED BY: MRR
FILE NAME: ST-LAB-SC-PNLC01.dwg
DATE CHECKED: 4/23/2015

STRUCTURAL
LABYRINTH WEIR SECTIONS

FLOODWATER RETARDING STRUCTURE NO. 6 REHABILITATION
PLUM CREEK WATERSHED
OF THE
PLUM CREEK WATER, TEXAS

NRCS
United States Department of Agriculture
Natural Resources Conservation Service

REVISIONS DATE

DRAWING NO.
TX-EN-0650

SHEET
S-16

Last Saved: 4/23/2015 12:24 PM Saved By: 02424

Plot Date: 4/23/2015 5:23 PM Plot By: 02424 Filename: N:\ST\ST-LAB-SC-PNLC01.dwg

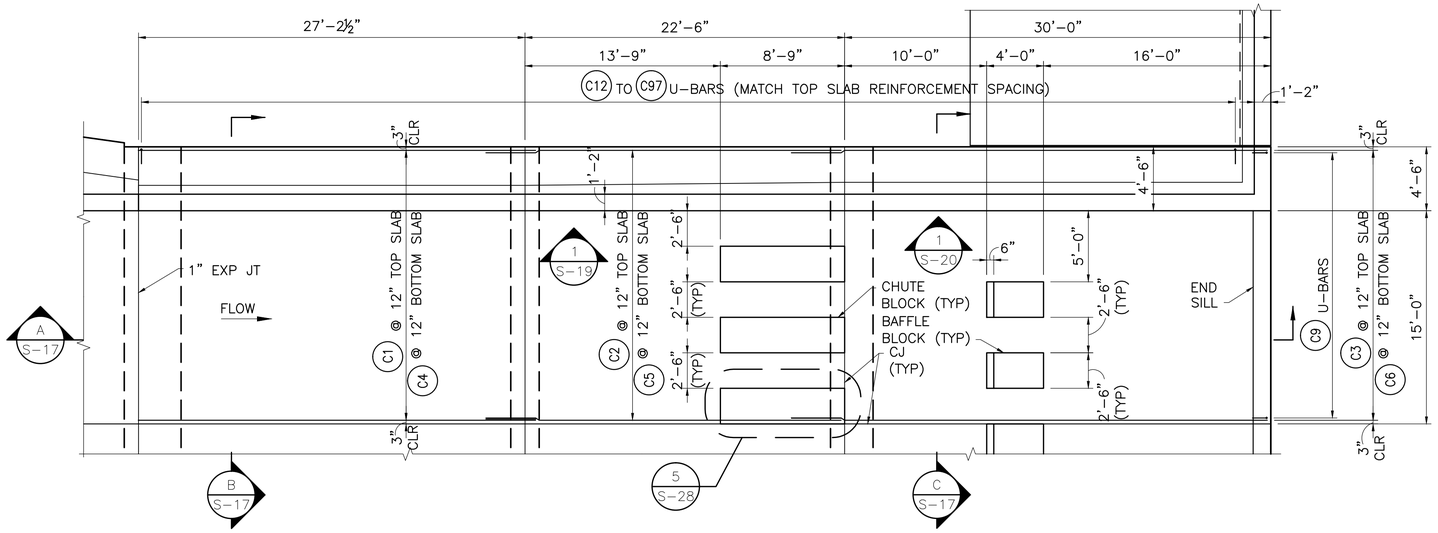

PARTIAL PLAN

0 4' 8'

3/16"=1'-0"

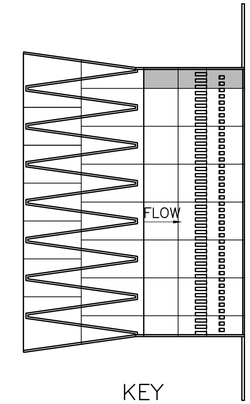

KEY

N.T.S.

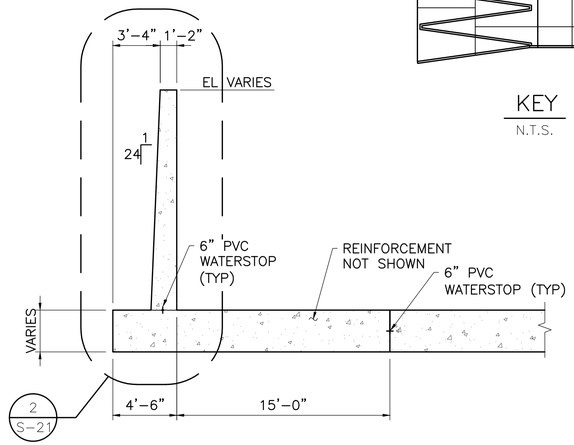

B S-17 SECTION B

0 4' 8'

3/16"=1'-0"

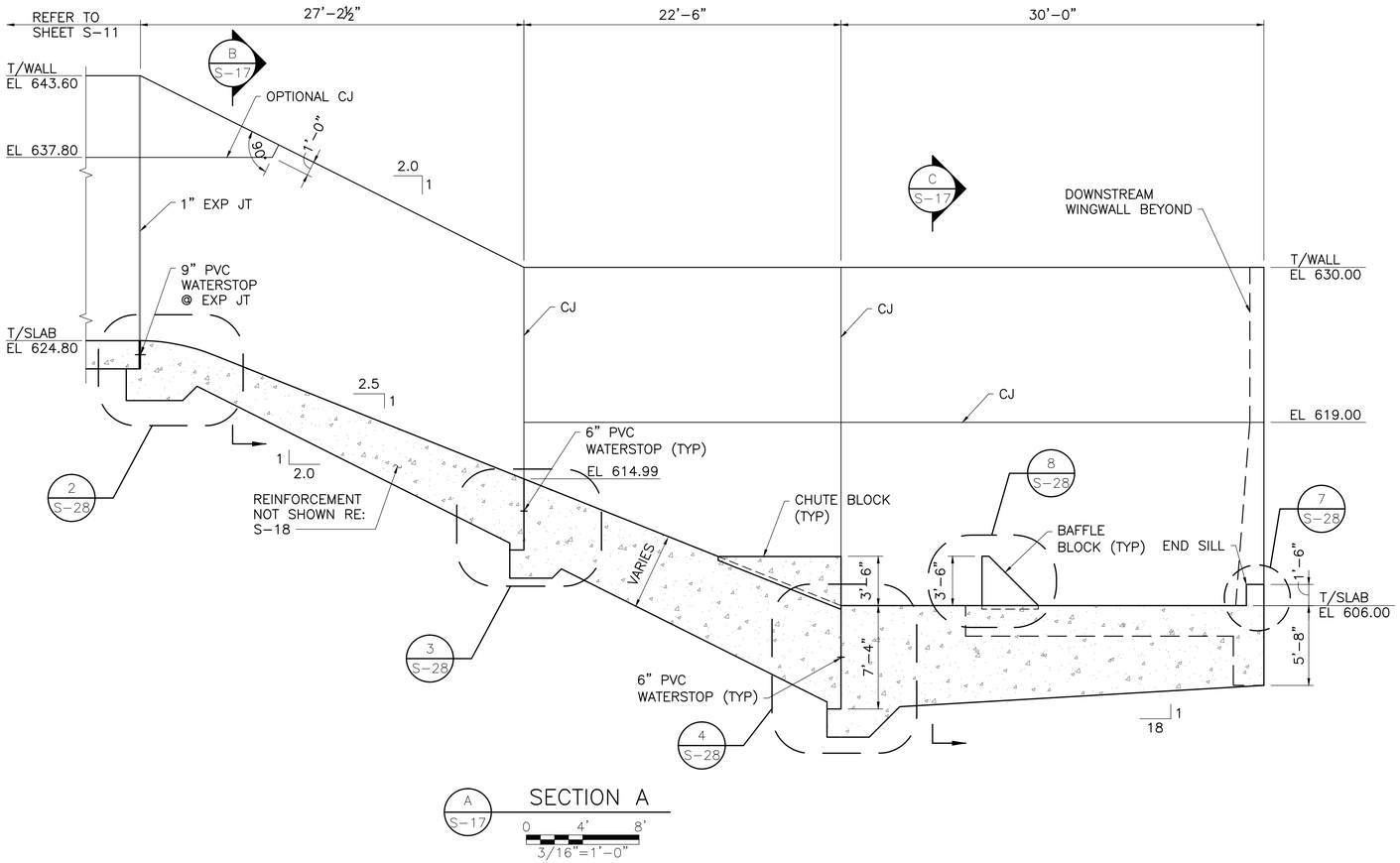

A S-17 SECTION A

0 4' 8'

3/16"=1'-0"

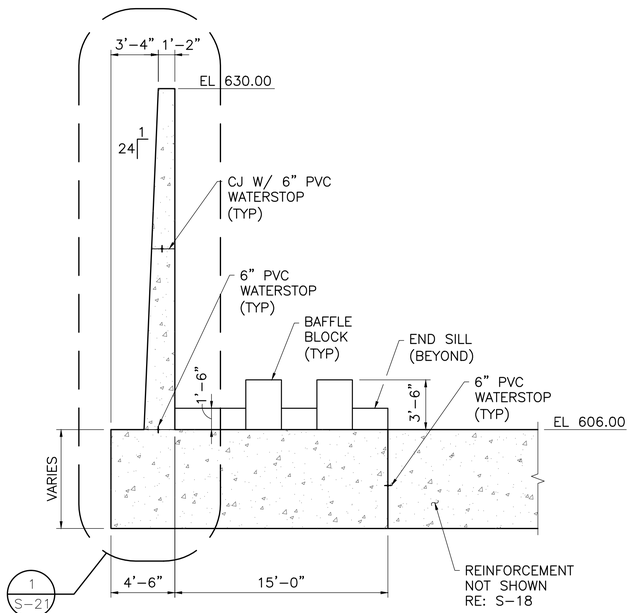

C S-17 SECTION C

0 4' 8'

3/16"=1'-0"

Prepared in 2007 by OC Preliminary
Last Saved: 4/23/2015 12:27 PM Saved By: 02424

Plot Date: 4/23/2015 5:24 PM Plot By: 02424 Filename: N:\ST\ST-LAB-PL-PANELD.dwg

Prepared for NRCS, Temple, Texas
Texas Registered Engineering Firm F-2144
MICHAEL RAY ROBERTSON
59701
LICENSED PROFESSIONAL ENGINEER
4/23/2015
04/24/15

DESIGNED BY: LB
DRAWN BY: JAW
CHECKED BY: MRR
FILE NAME: ST-LAB-PL-PANELD.dwg
DATE CHECKED: 4/23/2015

STRUCTURAL
LABYRINTH WEIR PARTIAL PLAN AND SECTIONS

FLOODWATER RETARDING STRUCTURE NO. 6 REHABILITATION
PLUM CREEK WATERSHED
OF THE
PLUM CREEK WATER, TEXAS

NRCS
United States Department of Agriculture
Natural Resources Conservation Service

REVISIONS DATE

DRAWING NO.
TX-EN-0650

SHEET
S-17

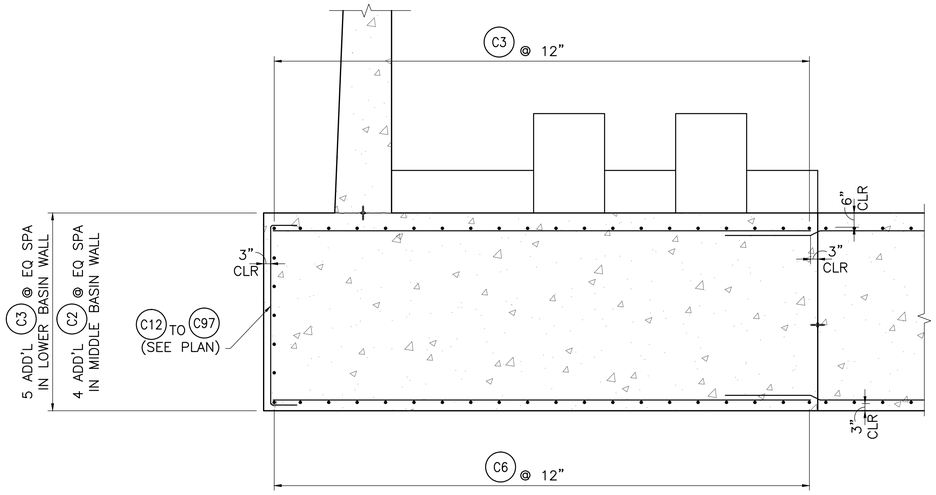

B S-18 REINFORCEMENT SECTION

0 1' 2' 4'
3/8"=1'-0

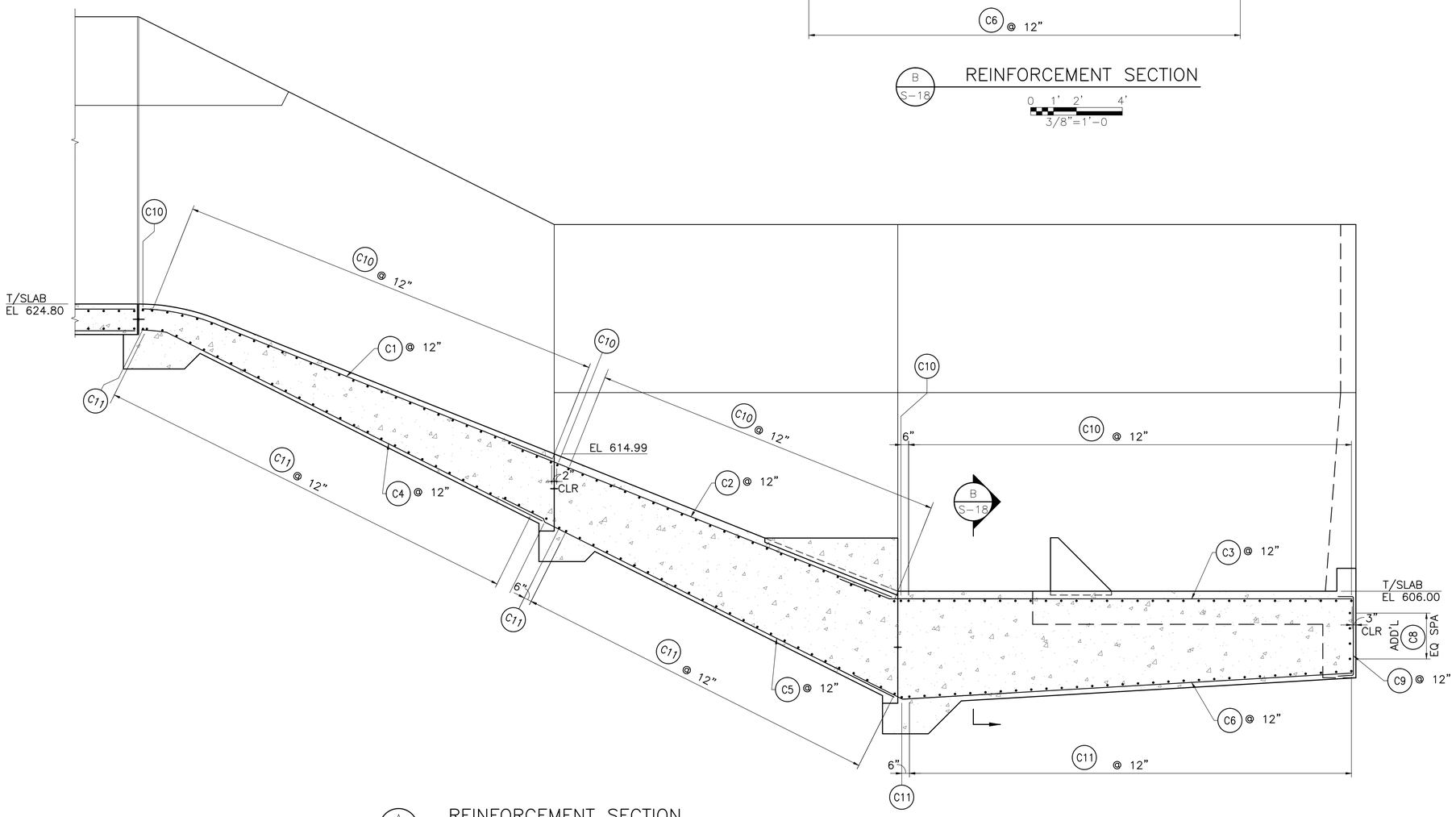

A S-17 REINFORCEMENT SECTION

0 1' 2' 4' 8'
1/4"=1'-0"

Last Saved: 4/23/2015 12:28 PM Saved By: 02424

Plot Date: 4/23/2015 5:24 PM Plot By: 02424 Filename: N:\ST\ST-LAB-SC-CHUT01.dwg

Prepared and Notarized by: Texas Registered Engineering Firm F-2144

MICHAEL RAY ROBERTSON
97012
LICENSED PROFESSIONAL ENGINEER
STATE OF TEXAS

04/24/15

DESIGNED BY: LB
DRAWN BY: JAW
CHECKED BY: MRR
FILE NAME: ST-LAB-SC-CHUT01.dwg
DATE CHECKED: 4/23/2015

STRUCTURAL
LABYRINTH WEIR SECTIONS

FLOODWATER RETARDING STRUCTURE NO. 6 REHABILITATION
PLUM CREEK WATERSHED
OF THE
PLUM CREEK WATER, TEXAS

United States Department of Agriculture
Natural Resources Conservation Service

REVISIONS DATE

DRAWING NO.
TX-EN-0650

SHEET
S-18

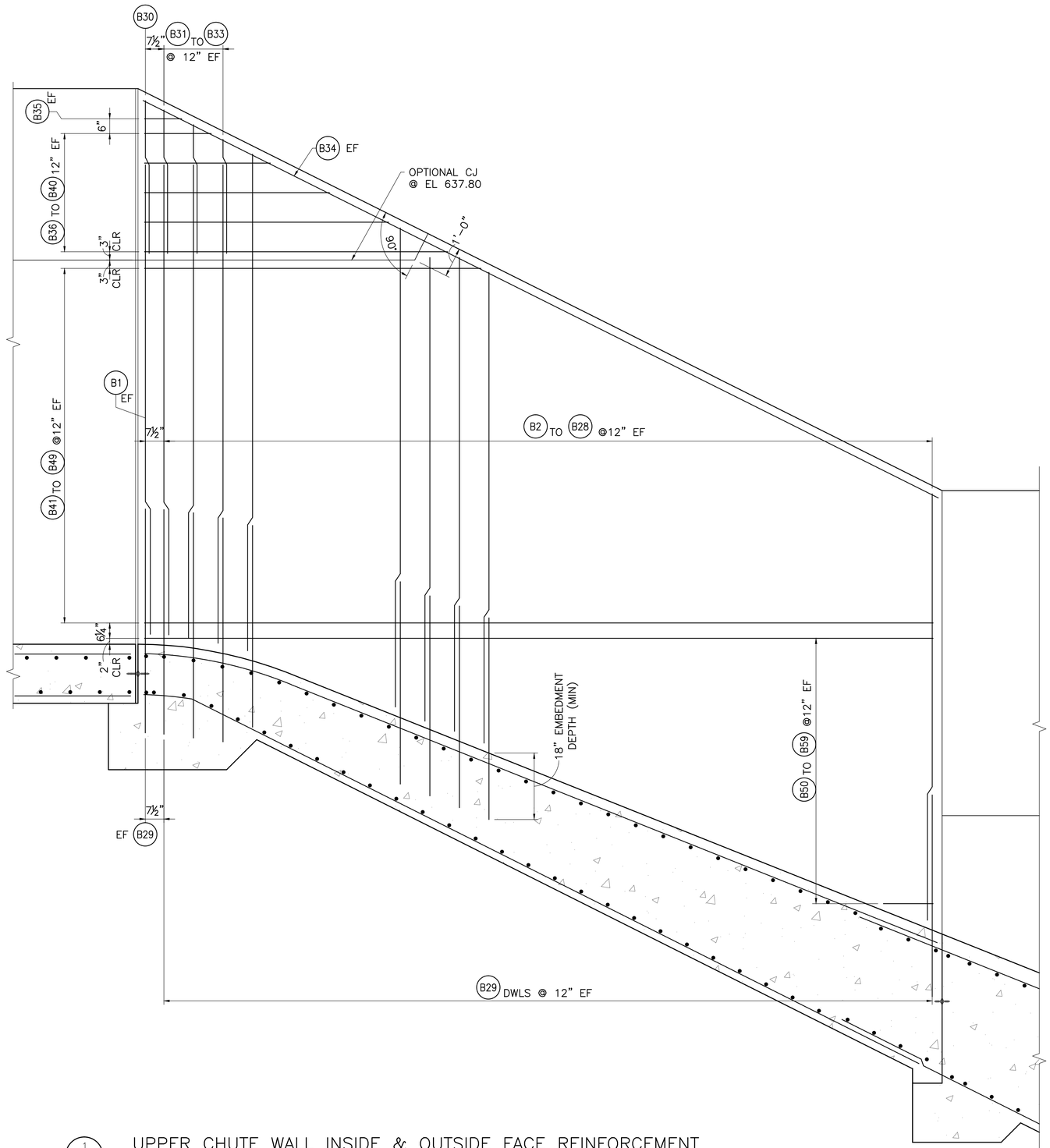

1
S-17

UPPER CHUTE WALL INSIDE & OUTSIDE FACE REINFORCEMENT

0 1' 2' 4'
1/2"=1'-0"

Freese and Nichols, Inc.
Texas Registered Engineering Firm F-2144

STATE OF TEXAS
MICHAEL RAY ROBERTSON
59701
REGISTERED
PROFESSIONAL ENGINEER

04/24/15

DESIGNED BY: LB
DRAWN BY: JAW
CHECKED BY: MRR
FILE NAME: ST-LAB-EL-PNLD02.dwg
DATE CHECKED: 4/23/2015

STRUCTURAL
LABYRINTH WEIR ELEVATIONS

FLOODWATER RETARDING STRUCTURE NO. 6 REHABILITATION
PLUM CREEK WATERSHED
OF THE
PLUM CREEK WATER, TEXAS

NRCS
United States Department of Agriculture
Natural Resources Conservation Service

REVISIONS DATE

DRAWING NO.
TX-EN-0650

SHEET
S-19

11/19/2014 2:15:41 P.M. LTS: 1.00 PSLTS: 1 TWIST: 0.0, 0.0, 0.0, 0.0, 0.0, 0.0, 0.0, 0.0, 0.0
REFERENCE FILE: N:\STANDARD\2012\TX-NRC-FULL BORDER

Plot Date: 4/23/2015 5:24 PM Plot By: 02424 Filename: N:\ST\ST-LAB-EL-PNLD02.dwg

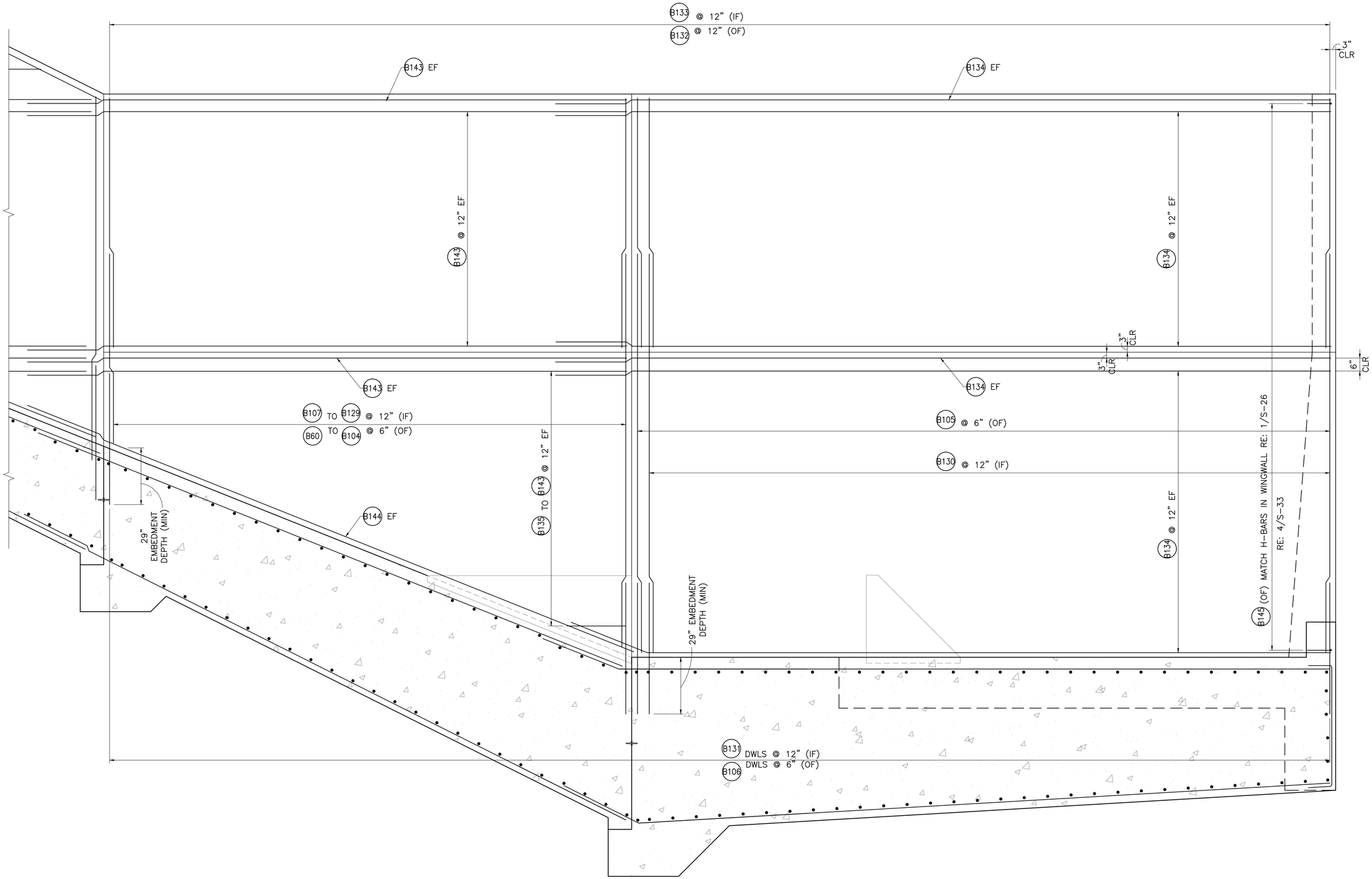

1
S-17

LOWER CHUTE/BASIN WALL INSIDE & OUTSIDE FACE REINFORCEMENT

0 1' 2' 4'
1/2"=1'-0"

Freese and Nichols, Inc.
Texas Registered Engineering Firm F-2144

STATE OF TEXAS
MICHAEL RAY ROBERTSON
59701
REGISTERED
PROFESSIONAL ENGINEER
04/24/15

DESIGNED BY: LB
DRAWN BY: JAW
CHECKED BY: MRR
FILE NAME: ST-LAB-EL-PNLD01.dwg
DATE CHECKED: 4/23/2015

STRUCTURAL
LABYRINTH WEIR ELEVATIONS

FLOODWATER RETARDING STRUCTURE NO. 6 REHABILITATION
PLUM CREEK WATERSHED
OF THE
PLUM CREEK WATER, TEXAS

NRCS
United States Department of Agriculture
Natural Resources Conservation Service

REVISIONS DATE

DRAWING NO.
TX-EN-0650

SHEET
S-20

Last Saved: 4/23/2015 12:29 PM Saved By: 02424

Plot Date: 4/23/2015 5:25 PM Plot By: 02424 Filename: N:\ST\ST-LAB-EL-PNLD01.dwg

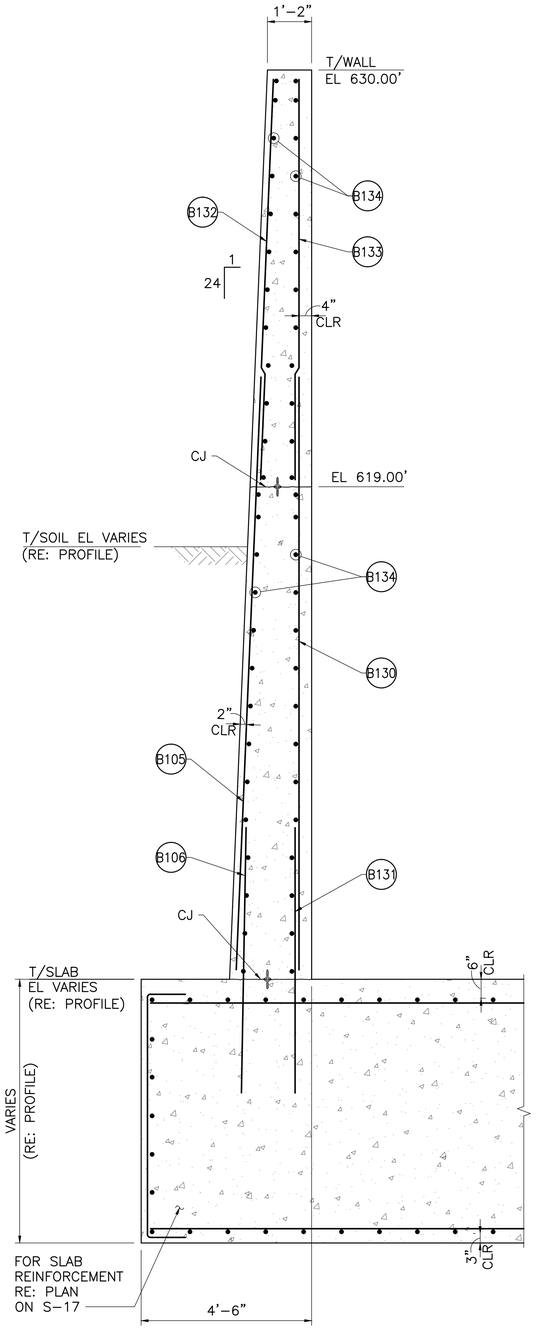

1 S-17 LOWER CHUTE/ BASIN WALL SECTION

0 1' 2' 4'

1/2"=1'-0"

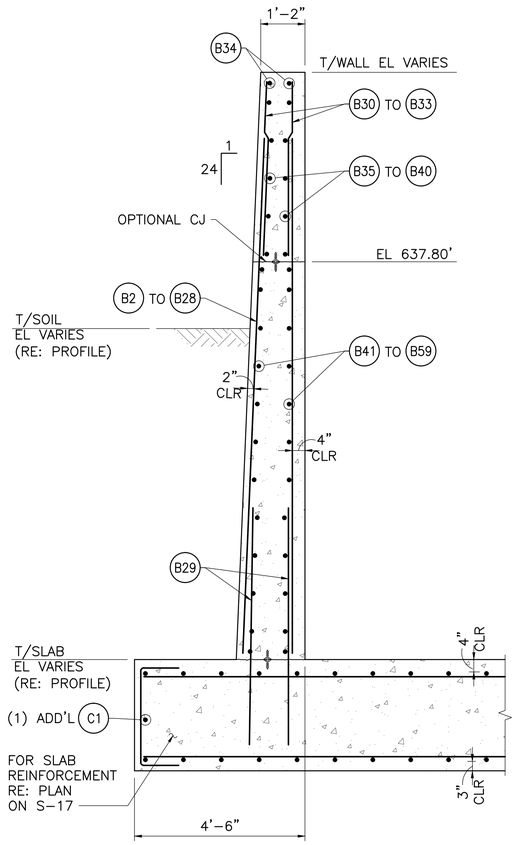

2 S-17 UPPER CHUTE WALL SECTION

0 1' 2' 4'

1/2"=1'-0"

Mark	Size (Bar #)	Quantity	Type	B (ft) (in)	C (ft) (in)	D (ft) (in)	Length (ft) (in)	Total Length (ft) (in)
B1	6	4	ST	15-1	–	–	15-1	60-4
B2	6	4	ST	15-1	–	–	15-1	60-4
B3	6	4	ST	15-2	–	–	15-2	60-8
B4	6	4	ST	15-4	–	–	15-4	61-4
B5	6	4	ST	16-11	–	–	16-11	67-8
B6	6	4	ST	16-10	–	–	16-10	67-4
B7	6	4	ST	16-9	–	–	16-9	67-0
B8	6	4	ST	16-8	–	–	16-8	66-8
B9	6	4	ST	16-6	–	–	16-6	66-0
B10	6	4	ST	16-5	–	–	16-5	65-8
B11	6	4	ST	16-4	–	–	16-4	65-4
B12	6	4	ST	16-2	–	–	16-2	64-8
B13	6	4	ST	16-1	–	–	16-1	64-4
B14	6	4	ST	16-0	–	–	16-0	64-0
B15	6	4	ST	15-11	–	–	15-11	63-8
B16	6	4	ST	15-9	–	–	15-9	63-0
B17	6	4	ST	15-8	–	–	15-8	62-8
B18	6	4	ST	15-7	–	–	15-7	62-4
B19	6	4	ST	15-5	–	–	15-5	61-8
B20	6	4	ST	15-4	–	–	15-4	61-4
B21	6	4	ST	15-3	–	–	15-3	61-0
B22	6	4	ST	15-2	–	–	15-2	60-8
B23	6	4	ST	15-0	–	–	15-0	60-0
B24	6	4	ST	14-11	–	–	14-11	59-8
B25	6	4	ST	14-10	–	–	14-10	59-4
B26	6	4	ST	14-8	–	–	14-8	58-8
B27	6	4	ST	14-7	–	–	14-7	58-4
B28	6	4	ST	14-6	–	–	14-6	58-0
B29	6	112	ST	3-8	–	–	3-8	410-8
B30	6	4	ST	5-1	–	–	5-1	20-4
B31	6	4	ST	4-9	–	–	4-9	19-0
B32	6	4	ST	4-3	–	–	4-3	17-0
B33	6	4	ST	3-9	–	–	3-9	15-0
B34	6	4	ST	30-1	–	–	30-1	120-4
B35	6	4	ST	1-3	–	–	1-3	5-0
B36	6	4	ST	2-3	–	–	2-3	9-0
B37	6	4	ST	4-3	–	–	4-3	17-0
B38	6	4	ST	6-3	–	–	6-3	25-0
B39	6	4	ST	8-3	–	–	8-3	33-0
B40	6	4	ST	10-3	–	–	10-3	41-0
B41	6	4	ST	11-3	–	–	11-3	45-0
B42	6	4	ST	13-3	–	–	13-3	53-0
B43	6	4	ST	15-3	–	–	15-3	61-0
B44	6	4	ST	17-3	–	–	17-3	69-0
B45	6	4	ST	19-3	–	–	19-3	77-0
B46	6	4	ST	21-3	–	–	21-3	85-0
B47	6	4	ST	23-3	–	–	23-3	93-0
B48	6	4	ST	25-3	–	–	25-3	101-0
B49	6	20	ST	26-8	–	–	26-8	533-4
B50	6	4	ST	26-8	–	–	26-8	106-8
B51	6	4	ST	21-11	–	–	21-11	87-8
B52	6	4	ST	19-5	–	–	19-5	77-8
B53	6	4	ST	16-11	–	–	16-11	67-8
B54	6	4	ST	14-5	–	–	14-5	57-8
B55	6	4	ST	11-11	–	–	11-11	47-8
B56	6	4	ST	9-5	–	–	9-5	37-8
B57	6	4	ST	6-11	–	–	6-11	27-8
B58	6	4	ST	4-5	–	–	4-5	17-8
B59	6	4	ST	1-11	–	–	1-11	7-8
B60	8	2	ST	7-4	–	–	7-4	14-8
B61	8	2	ST	7-7	–	–	7-7	15-2
B62	8	2	ST	7-9	–	–	7-9	15-6
B63	8	2	ST	8-0	–	–	8-0	16-0
B64	8	2	ST	8-2	–	–	8-2	16-4
B65	8	2	ST	8-5	–	–	8-5	16-10
B66	8	2	ST	8-7	–	–	8-7	17-2
B67	8	2	ST	8-10	–	–	8-10	17-8
B68	8	2	ST	9-0	–	–	9-0	18-0
B69	8	2	ST	9-3	–	–	9-3	18-6
B70	8	2	ST	9-5	–	–	9-5	18-10
B71	8	2	ST	9-8	–	–	9-8	19-4
B72	8	2	ST	9-10	–	–	9-10	19-8
B73	8	2	ST	10-1	–	–	10-1	20-2
B74	8	2	ST	10-3	–	–	10-3	20-6
B75	8	2	ST	10-6	–	–	10-6	21-0
B76	8	2	ST	10-8	–	–	10-8	21-4
B77	8	2	ST	10-11	–	–	10-11	21-10
B78	8	2	ST	11-1	–	–	11-1	22-2
B79	8	2	ST	11-4	–	–	11-4	22-8
B80	8	2	ST	11-6	–	–	11-6	23-0
B81	8	2	ST	11-9	–	–	11-9	23-6
B82	8	2	ST	11-11	–	–	11-11	23-10
B83	8	2	ST	12-2	–	–	12-2	24-4
B84	8	2	ST	12-4	–	–	12-4	24-8
B85	8	2	ST	12-7	–	–	12-7	25-2
B86	8	2	ST	12-10	–	–	12-10	25-8
B87	8	2	ST	13-0	–	–	13-0	26-0
B88	8	2	ST	13-3	–	–	13-3	26-6
B89	8	2	ST	13-5	–	–	13-5	26-10
B90	8	2	ST	13-8	–	–	13-8	27-4
B91	8	2	ST	13-10	–	–	13-10	27-8
B92	8	2	ST	14-1	–	–	14-1	28-2
B93	8	2	ST	14-3	–	–	14-3	28-6
B94	8	2	ST	14-6	–	–	14-6	29-0
B95	8	2	ST	14-8	–	–	14-8	29-4
B96	8	2	ST	14-11	–	–	14-11	29-10
B97	8	2	ST	15-1	–	–	15-1	30-2
B98	8	2	ST	15-4	–	–	15-4	30-8
B99	8	2	ST	15-6	–	–	15-6	31-0
B100	8	2	ST	15-9	–	–	15-9	31-6
B101	8	2	ST	15-11	–	–	15-11	31-10
B102	8	2	ST	16-2	–	–	16-2	32-4
B103	8	2	ST	16-4	–	–	16-4	32-8
B104	8	2	ST	16-7	–	–	16-7	33-2
B105	8	120	ST	16-6	–	–	16-6	1980-0
B106	8	210	ST	5-10	–	–	5-10	1225-0
B107	8	2	ST	7-4	–	–	7-4	14-8
B108	8	2	ST	7-9	–	–	7-9	15-6
B109	8	2	ST	8-2	–	–	8-2	16-4
B110	8	2	ST	8-7	–	–	8-7	17-2
B111	8	2	ST	9-0	–	–	9-0	18-0
B112	8	2	ST	9-5	–	–	9-5	18-10
B113	8	2	ST	9-10	–	–	9-10	19-8
B114	8	2	ST	10-3	–	–	10-3	20-6
B115	8	2	ST	10-8	–	–	10-8	21-4
B116	8	2	ST	11-1	–	–	11-1	22-2
B117	8	2	ST	11-6	–	–	11-6	23-0
B118	8	2	ST	11-11	–	–	11-11	23-10
B119	8	2	ST	12-4	–	–	12-4	24-8
B120	8	2	ST	12-9	–	–	12-9	25-6
B121	8	2	ST	13-2	–	–	13-2	26-4
B122	8	2	ST	13-7	–	–	13-7	27-2
B123	8	2	ST	14-0	–	–	14-0	28-0
B124	8	2	ST	14-5	–	–	14-5	28-10
B125	8	2	ST	14-11	–	–	14-11	29-10
B126	8	2	ST	15-4	–	–	15-4	30-8
B127	8	2	ST	15-9	–	–	15-9	31-6
B128	8	2	ST	16-2	–	–	16-2	32-4
B129	8	2	ST	16-7	–	–	16-7	33-2
B130	8	60	ST	16-6	–	–	16-6	990-0
B131	8	106	ST	5-10	–	–	5-10	618-4
B132	6	106	ST	10-6	–	–	10-6	1113-0
B133	6	106	ST	10-6	–	–	10-6	1113-0
B134	6	104	ST	31-9	–	–	31-9	3302-0
B135	6	4	ST	2-1	–	–	2-1	8-4
B136	6	4	ST	4-7	–	–	4-7	18-4
B137	6	4	ST	7-1	–	–	7-1	28-4
B138	6	4	ST	9-7	–	–	9-7	38-4
B139	6	4	ST	12-1	–	–	12-1	48-4
B140	6	4	ST	14-7	–	–	14-7	58-4
B141	6	4	ST	17-1	–	–	17-1	68-4
B142	6	4	ST	19-7	–	–	19-7	78-4
B143	6	56	ST	24-4	–	–	24-4	1362-8
B144	6	4	ST	26-3	–	–	26-3	105-0
B145	6	104	H	2-10	0-9	–	3-7	372-8

NOTES:

1. REFER TO S-32 FOR BAR TYPES.

Prepared for NRCS by: Texas Registered Engineering Firm F-2144

MICHAEL RAY ROBERTSON 97012 LICENSED PROFESSIONAL ENGINEER

04/24/15

DESIGNED BY: LB
DRAWN BY: JAW
CHECKED BY: MRR
FILE NAME: ST-LAB-SC-PNLD01.dwg
DATE CHECKED: 4/23/2015

STRUCTURAL
LABYRINTH WEIR SECTIONS

FLOODWATER RETARDING STRUCTURE NO. 6 REHABILITATION
PLUM CREEK WATERSHED
OF THE
PLUM CREEK WATER, TEXAS

United States Department of Agriculture
Natural Resources Conservation Service

REVISIONS	DATE

DRAWING NO.
TX-EN-0650

SHEET
S-21

Plot Date: 4/23/2015 5:25 PM Plot By: 02424 Filename: N:\ST\ST-LAB-SC-PNLD01.dwg
Last Saved: 4/23/2015 12:44 PM Saved By: 02424

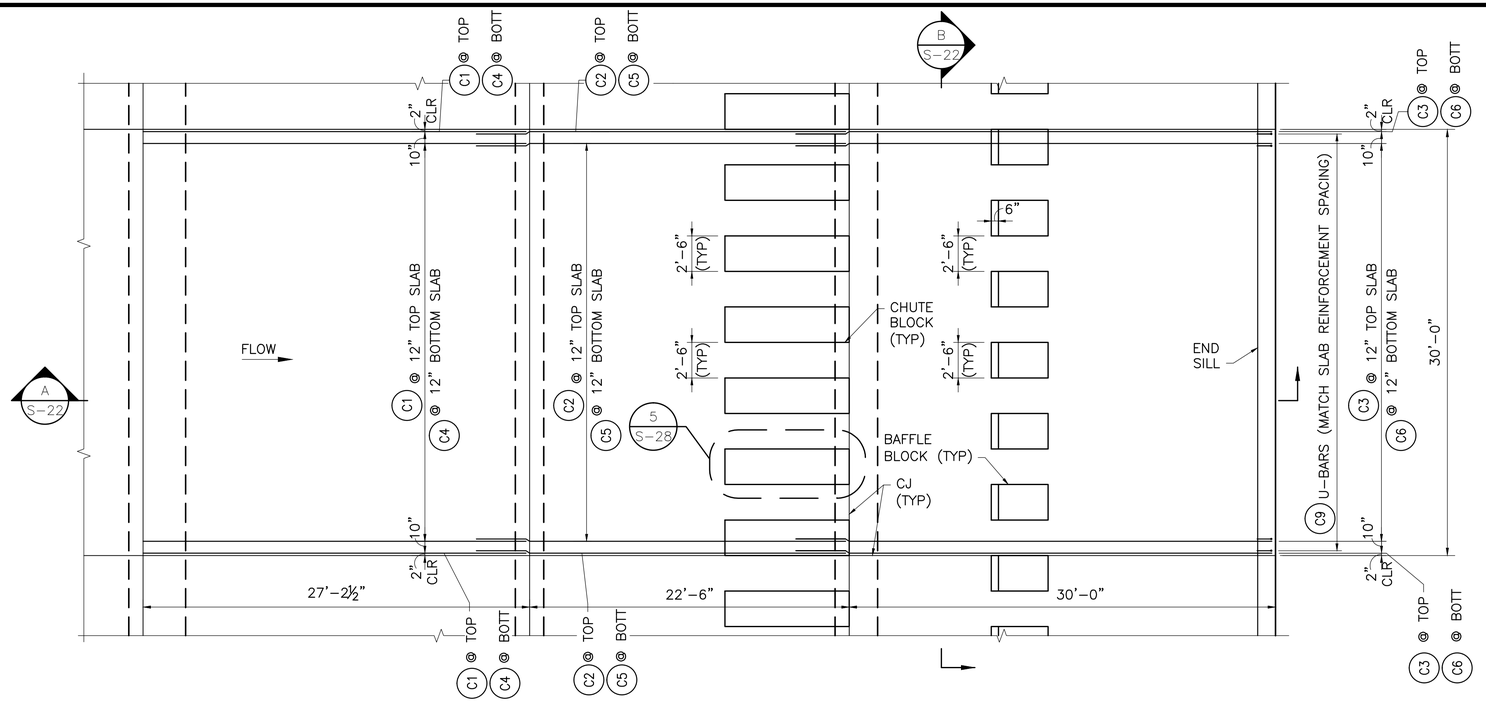

PARTIAL PLAN

0 4' 8'
3/16"=1'-0"

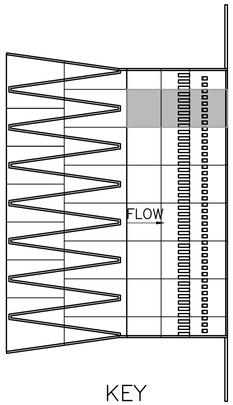

KEY

N.T.S.

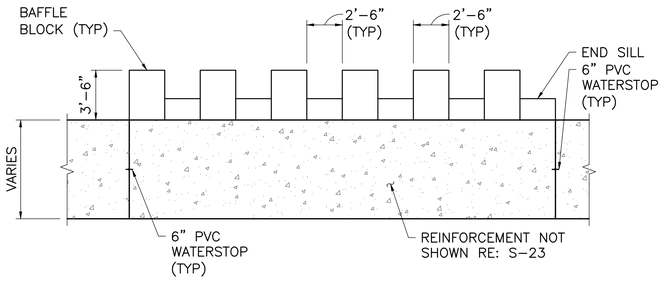

SECTION B

0 4' 8'
3/16"=1'-0"

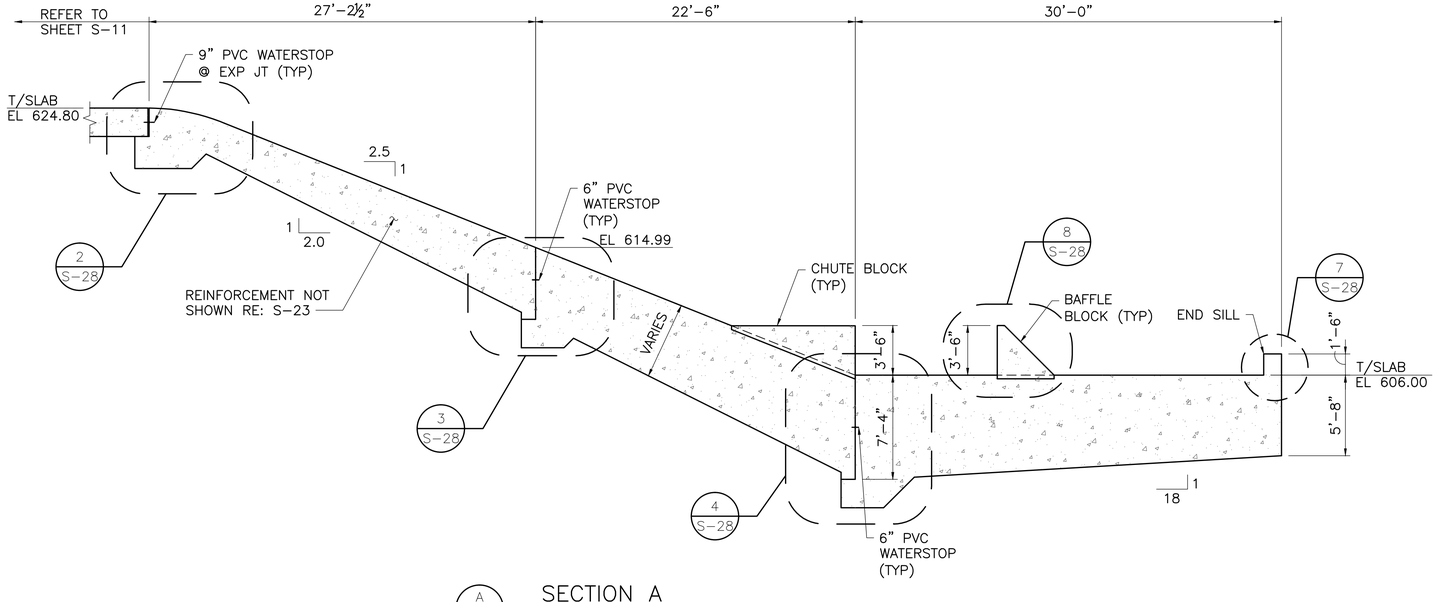

SECTION A

0 4' 8'
3/16"=1'-0"

Freese and Nichols, Inc.
Texas Registered Engineering Firm F-2144

STATE OF TEXAS
MICHAEL RAY ROBERSON
59701
REGISTERED PROFESSIONAL ENGINEER
04/24/15

DESIGNED BY: LB
DRAWN BY: JAW
CHECKED BY: MRR
FILE NAME: ST-LAB-PL-PANELE.dwg
DATE CHECKED: 4/23/2015

STRUCTURAL
LABYRINTH WEIR PARTIAL PLAN AND SECTIONS

FLOODWATER RETARDING STRUCTURE NO. 6 REHABILITATION
PLUM CREEK WATERSHED
OF THE
PLUM CREEK WATER, TEXAS

NRCS
United States Department of Agriculture
Natural Resources Conservation Service

REVISIONS DATE

DRAWING NO.
TX-EN-0650

SHEET
S-22

Last Saved: 4/23/2015 12:45 PM Saved By: 02424

Plot Date: 4/23/2015 5:25 PM Plot By: 02424 Filename: N:\ST\ST-LAB-PL-PANELE.dwg

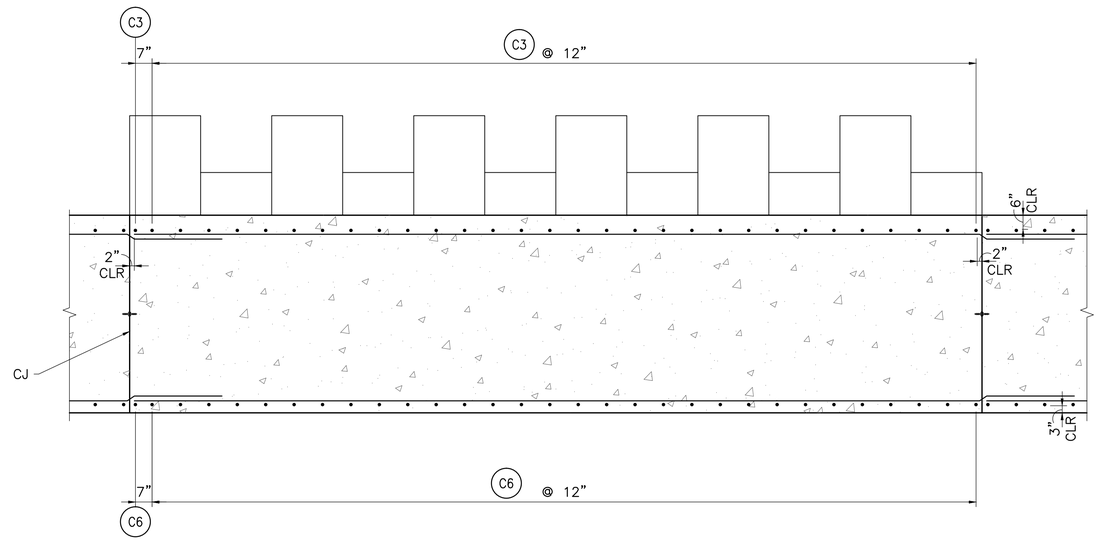

B S-23 REINFORCEMENT SECTION

0 1' 2' 4'
3/8"=1'-0

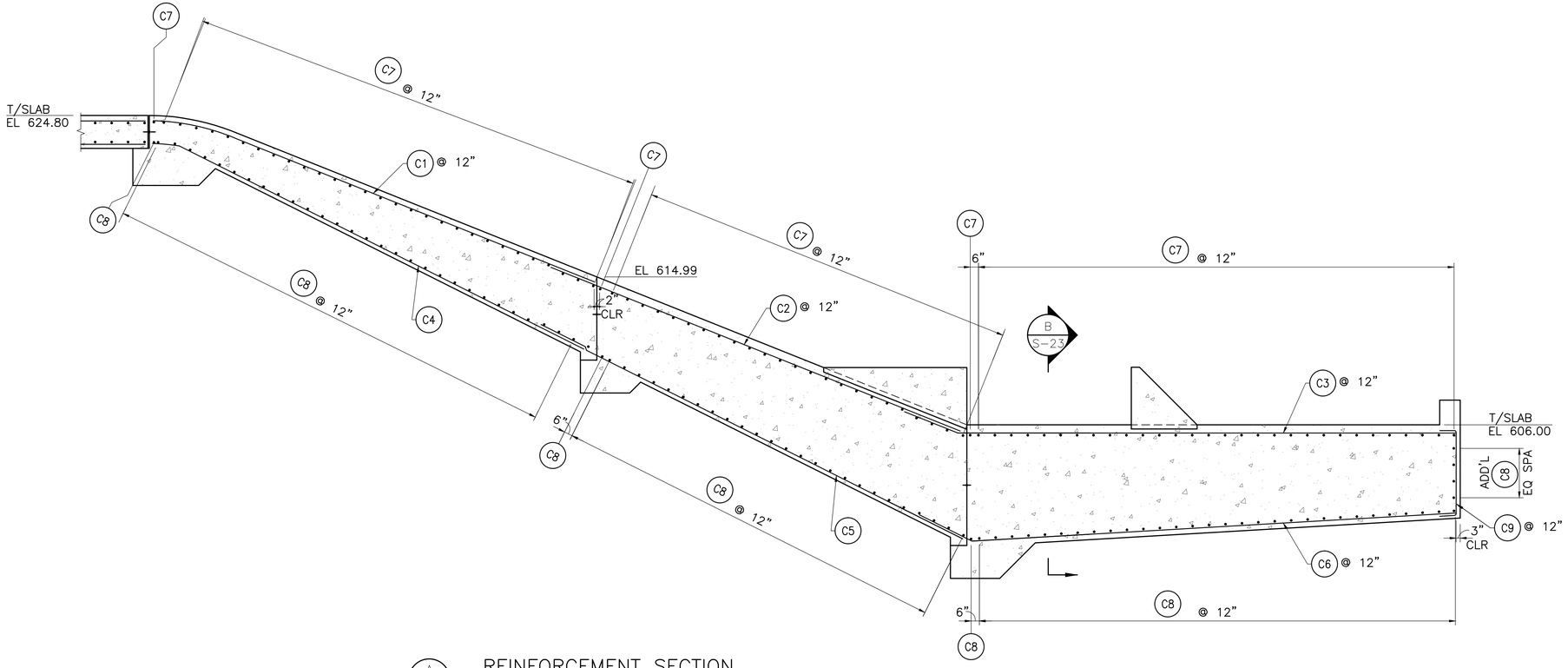

A S-22 REINFORCEMENT SECTION

0 1' 2' 4' 8'
1/4"=1'-0"

Freese and Nichols, Inc.
Texas Registered Engineering Firm F-2144

STATE OF TEXAS
MICHAEL RAY ROBERTSON
59701
REGISTERED
PROFESSIONAL ENGINEER
04/24/15

DESIGNED BY: LB
DRAWN BY: JAW
CHECKED BY: MRR
FILE NAME: ST-LAB-EL-PNLE01.dwg
DATE CHECKED: 4/23/2015

STRUCTURAL
LABYRINTH WEIR ELEVATIONS

FLOODWATER RETARDING STRUCTURE NO. 6 REHABILITATION
PLUM CREEK WATERSHED
OF THE
PLUM CREEK WATER, TEXAS

NRCS
United States Department of Agriculture
Natural Resources Conservation Service

REVISIONS DATE

DRAWING NO.
TX-EN-0650

SHEET
S-23

Last Saved: 4/23/2015 12:42 PM Saved By: 02424

Plot Date: 4/23/2015 5:25 PM Plot By: 02424 Filename: N:\ST\ST-LAB-EL-PNLE01.dwg

Mark	Size (Bar #)	Quantity	Type	B (ft) (in)	C (ft) (in)	D (ft) (in)	Length (ft) (in)	Total Length (ft) (in)
C1	7	228	ST1	28-8	–	–	28-8	6536-0
C2	7	234	ST	27-5	–	–	27-5	6415-6
C3	7	236	ST2	30-3	3-9	–	34-0	8024-0
C4	6	226	ST1	29-9	–	–	29-9	6723-6
C5	6	226	ST	27-8	–	–	27-8	6252-8
C6	6	226	ST3	29-10	2-2	–	32-0	7232-0
C7	7	516	ST	33-7	–	–	33-7	17329-0
C8	6	560	ST	32-0	–	–	32-0	17920-0
C9	6	226	U	4-10	2-0	2-0	8-10	1996-4
C10	7	172	ST	22-10	–	–	22-10	3927-4
C11	6	176	ST	21-3	–	–	21-3	3740-0
C12	6	2	U	1-3	2-0	2-0	5-3	10-6
C13	6	2	U	1-3	2-0	2-0	5-3	10-6
C14	6	2	U	1-5	2-0	2-0	5-5	10-10
C15	6	2	U	1-7	2-0	2-0	5-7	11-2
C16	6	2	U	1-10	2-0	2-0	5-10	11-8
C17	6	2	U	1-10	2-0	2-0	5-10	11-8
C18	6	2	U	1-11	2-0	2-0	5-11	11-10
C19	6	2	U	2-0	2-0	2-0	6-0	12-0
C20	6	2	U	2-1	2-0	2-0	6-1	12-2
C21	6	2	U	2-2	2-0	2-0	6-2	12-4
C22	6	2	U	2-3	2-0	2-0	6-3	12-6
C23	6	2	U	2-4	2-0	2-0	6-4	12-8
C24	6	2	U	2-5	2-0	2-0	6-5	12-10
C25	6	2	U	2-6	2-0	2-0	6-6	13-0
C26	6	2	U	2-7	2-0	2-0	6-7	13-2
C27	6	2	U	2-8	2-0	2-0	6-8	13-4
C28	6	2	U	2-8	2-0	2-0	6-8	13-4
C29	6	2	U	2-9	2-0	2-0	6-9	13-6
C30	6	2	U	2-10	2-0	2-0	6-10	13-8
C31	6	2	U	2-11	2-0	2-0	6-11	13-10
C32	6	2	U	3-0	2-0	2-0	7-0	14-0
C33	6	2	U	3-1	2-0	2-0	7-1	14-2
C34	6	2	U	3-2	2-0	2-0	7-2	14-4
C35	6	2	U	3-3	2-0	2-0	7-3	14-6
C36	6	2	U	3-4	2-0	2-0	7-4	14-8
C37	6	2	U	3-5	2-0	2-0	7-5	14-10
C38	6	2	U	3-6	2-0	2-0	7-6	15-0
C39	6	2	U	3-7	2-0	2-0	7-7	15-2
C40	6	2	U	3-8	2-0	2-0	7-8	15-4
C41	6	2	U	3-9	2-0	2-0	7-9	15-6
C42	6	2	U	3-9	2-0	2-0	7-9	15-6
C43	6	2	U	3-10	2-0	2-0	7-10	15-8
C44	6	2	U	3-11	2-0	2-0	7-11	15-10
C45	6	2	U	4-0	2-0	2-0	8-0	16-0
C46	6	2	U	4-2	2-0	2-0	8-2	16-4
C47	6	2	U	4-3	2-0	2-0	8-3	16-6
C48	6	2	U	4-4	2-0	2-0	8-4	16-8
C49	6	2	U	4-5	2-0	2-0	8-5	16-10
C50	6	2	U	4-7	2-0	2-0	8-7	17-2
C51	6	2	U	4-8	2-0	2-0	8-8	17-4
C52	6	2	U	4-9	2-0	2-0	8-9	17-6
C53	6	2	U	4-10	2-0	2-0	8-10	17-8
C54	6	2	U	5-0	2-0	2-0	9-0	18-0
C55	6	2	U	5-1	2-0	2-0	9-1	18-2
C56	6	2	U	5-2	2-0	2-0	9-2	18-4
C57	6	2	U	5-3	2-0	2-0	9-3	18-6
C58	6	2	U	5-5	2-0	2-0	9-5	18-10
C59	6	2	U	5-6	2-0	2-0	9-6	19-0
C60	6	2	U	5-7	2-0	2-0	9-7	19-2
C61	6	2	U	5-8	2-0	2-0	9-8	19-4
C62	6	2	U	5-10	2-0	2-0	9-10	19-8
C63	6	2	U	5-11	2-0	2-0	9-11	19-10
C64	6	2	U	6-0	2-0	2-0	10-0	20-0
C65	6	2	U	6-1	2-0	2-0	10-1	20-2
C66	6	2	U	6-3	2-0	2-0	10-3	20-6
C67	6	2	U	6-5	2-0	2-0	10-5	20-10
C68	6	2	U	6-6	2-0	2-0	10-6	21-0
C69	6	2	U	6-5	2-0	2-0	10-5	20-10
C70	6	2	U	6-4	2-0	2-0	10-4	20-8
C71	6	2	U	6-4	2-0	2-0	10-4	20-8
C72	6	2	U	6-3	2-0	2-0	10-3	20-6
C73	6	2	U	6-2	2-0	2-0	10-2	20-4
C74	6	2	U	6-2	2-0	2-0	10-2	20-4
C75	6	2	U	6-1	2-0	2-0	10-1	20-2
C76	6	2	U	6-0	2-0	2-0	10-0	20-0
C77	6	2	U	5-11	2-0	2-0	9-11	19-10
C78	6	2	U	5-11	2-0	2-0	9-11	19-10
C79	6	2	U	5-10	2-0	2-0	9-10	19-8

Mark	Size (Bar #)	Quantity	Type	B (ft) (in)	C (ft) (in)	D (ft) (in)	Length (ft) (in)	Total Length (ft) (in)
C80	6	2	U	5-9	2-0	2-0	9-9	19-6
C81	6	2	U	5-9	2-0	2-0	9-9	19-6
C82	6	2	U	5-8	2-0	2-0	9-8	19-4
C83	6	2	U	5-7	2-0	2-0	9-7	19-2
C84	6	2	U	5-7	2-0	2-0	9-7	19-2
C85	6	2	U	5-6	2-0	2-0	9-6	19-0
C86	6	2	U	5-5	2-0	2-0	9-5	18-10
C87	6	2	U	5-4	2-0	2-0	9-4	18-8
C88	6	2	U	5-4	2-0	2-0	9-4	18-8
C89	6	2	U	5-3	2-0	2-0	9-3	18-6
C90	6	2	U	5-2	2-0	2-0	9-2	18-4
C91	6	2	U	5-2	2-0	2-0	9-2	18-4
C92	6	2	U	5-1	2-0	2-0	9-1	18-2
C93	6	2	U	5-0	2-0	2-0	9-0	18-0
C94	6	2	U	5-0	2-0	2-0	9-0	18-0
C95	6	2	U	4-11	2-0	2-0	8-11	17-10
C96	6	2	U	4-10	2-0	2-0	8-10	17-8
C97	6	2	U	4-9	2-0	2-0	8-9	17-6

NOTES:
1. REFER TO S-32 FOR BAR TYPES.

Prepared in Cooperation with:
Texas Register Engineering Firm F-2144
MICHAEL RAY ROBERTSON
59701
LICENSED PROFESSIONAL ENGINEER
04/23/15
04024115

DESIGNED BY: LB
DRAWN BY: JAW
CHECKED BY: MRR
FILE NAME: ST-LAB-TB-SLAB01.dwg
DATE CHECKED: 4/23/2015

Value
CHUTE SLAB REINFORCEMENT TABLE

FLOODWATER RETARDING STRUCTURE NO. 6 REHABILITATION
PLUM CREEK WATERSHED
OF THE
PLUM CREEK WATER, TEXAS

United States Department of Agriculture
Natural Resources Conservation Service

REVISIONS DATE

DRAWING NO.
TX-EN-0650

SHEET
S-24

Last Saved: 4/23/2015 2:13 PM Saved By: 02424

Plot Date: 4/23/2015 5:26 PM Plot By: 02424 Filename: N:\ST\ST-LAB-TB-SLAB01.dwg

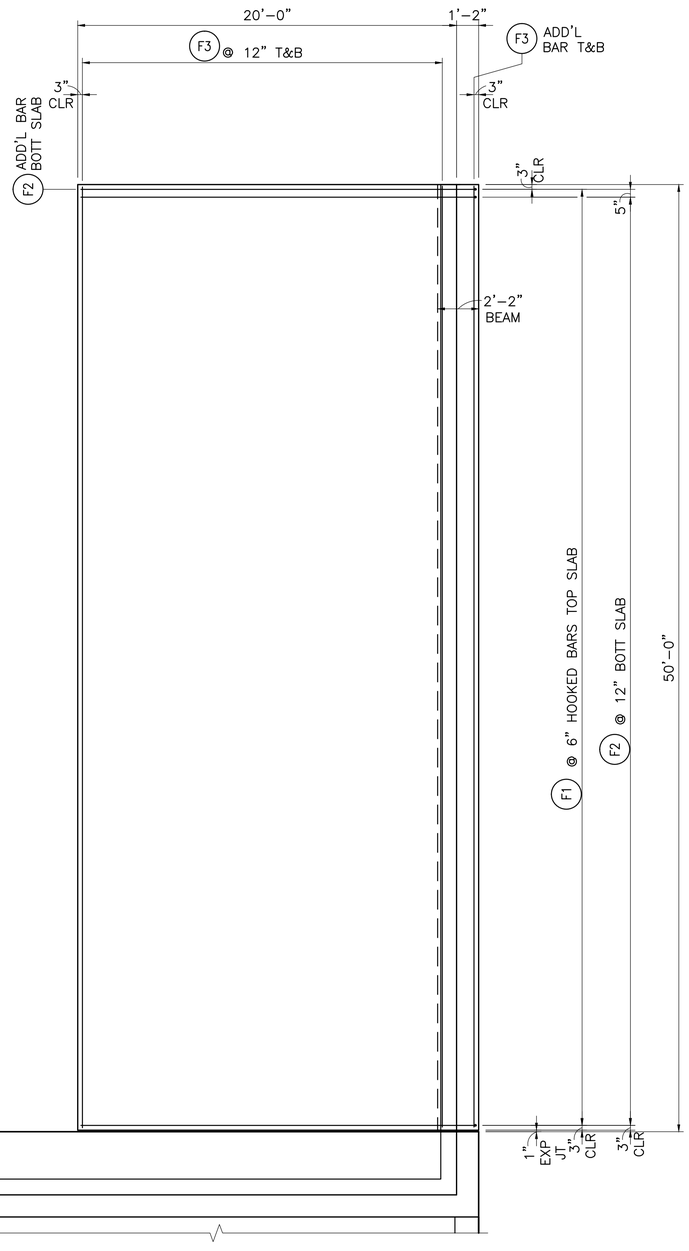

WINGWALL TOP & BOTTOM SLAB REINFORCEMENT

0 1' 2' 4' 8'
1/4"=1'-0"

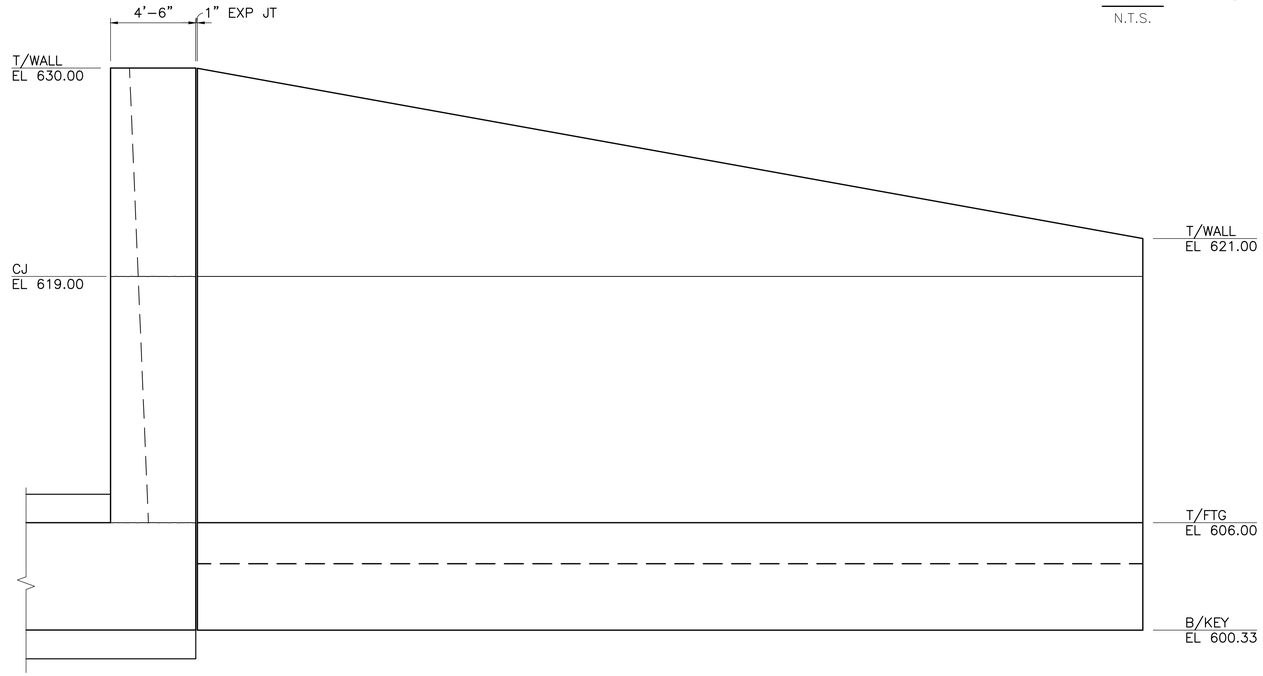

WINGWALL ELEVATION

0 1' 2' 4' 8'
1/4"=1'-0"

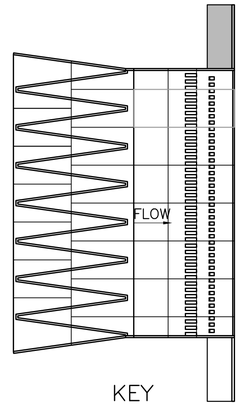

KEY
N.T.S.

Freese and Nichols, Inc.
Texas Registered Engineering Firm F-2144

STATE OF TEXAS
MICHAEL RAY ROBERTSON
59701
REGISTERED
PROFESSIONAL ENGINEER
04/24/15

DESIGNED BY: LB
DRAWN BY: JAW
CHECKED BY: MRR
FILE NAME: ST-LAB-PL-WING.dwg
DATE CHECKED: 4/23/2015

STRUCTURAL
WINGWALL PLAN AND SECTION
FLOODWATER RETARDING STRUCTURE NO. 6 REHABILITATION
PLUM CREEK WATERSHED
OF THE
PLUM CREEK WATER, TEXAS

NRCS
United States Department of Agriculture
Natural Resources Conservation Service

REVISIONS DATE

DRAWING NO.
TX-EN-0650

SHEET
S-25

11/25/2014 3:44:00 P.M. LTS: 1.00 PSLTS: 1 TWIST: 0.0, 0.0, 0.0, 0.0, 0.0, 0.0, 0.0, 0.0
2 REFERENCE FILES: .\BASE\ST-ENG-STAMP and N:\STANDARD\2012\TX-NRC-FULL BORDER

Plot Date: 4/23/2015 5:26 PM Plot By: 02424 Filename: N:\ST\ST-LAB-PL-WING.dwg

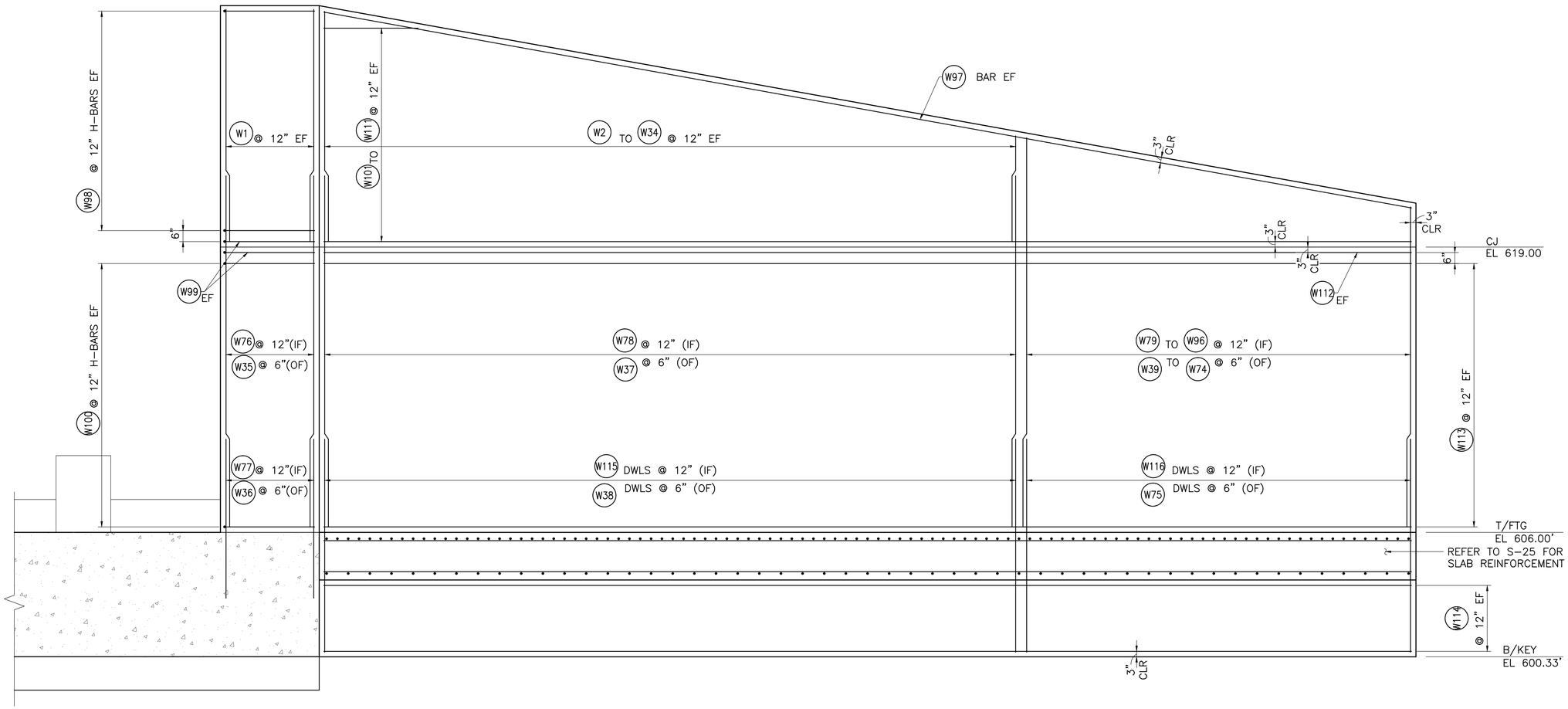

1 S-26 WINGWALL INSIDE & OUTSIDE FACE REINFORCEMENT

0 1' 2' 4'
3/8"=1'-0

Freese and Nichols, Inc.
Texas Registered Engineering Firm F-2144

STATE OF TEXAS
MICHAEL RAY ROBERSON
59701
REGISTERED PROFESSIONAL ENGINEER
04/24/15

DESIGNED BY: LB
DRAWN BY: JAW
CHECKED BY: MRR
FILE NAME: ST-LAB-SC-WING01.dwg
DATE CHECKED: 4/23/2015

STRUCTURAL
WINGWALL ELEVATION

FLOODWATER RETARDING STRUCTURE NO. 6 REHABILITATION
PLUM CREEK WATERSHED
OF THE
PLUM CREEK WATER, TEXAS

NRCS
United States Department of Agriculture
Natural Resources Conservation Service

REVISIONS DATE

DRAWING NO.
TX-EN-0650

SHEET
S-26

11/19/2014 2:15:41 P.M. LTS: 1.00 PSLTS: 1 TWIST: 0.0, 0.0, 0.0, 0.0, 0.0, 0.0, 0.0, 0.0, 0.0
REFERENCE FILE: N:\STANDARD\2012\TX-NRC-FULL BORDER

Plot Date: 4/23/2015 5:26 PM Plot By: 02424 Filename: N:\ST\ST-LAB-SC-WING01.dwg

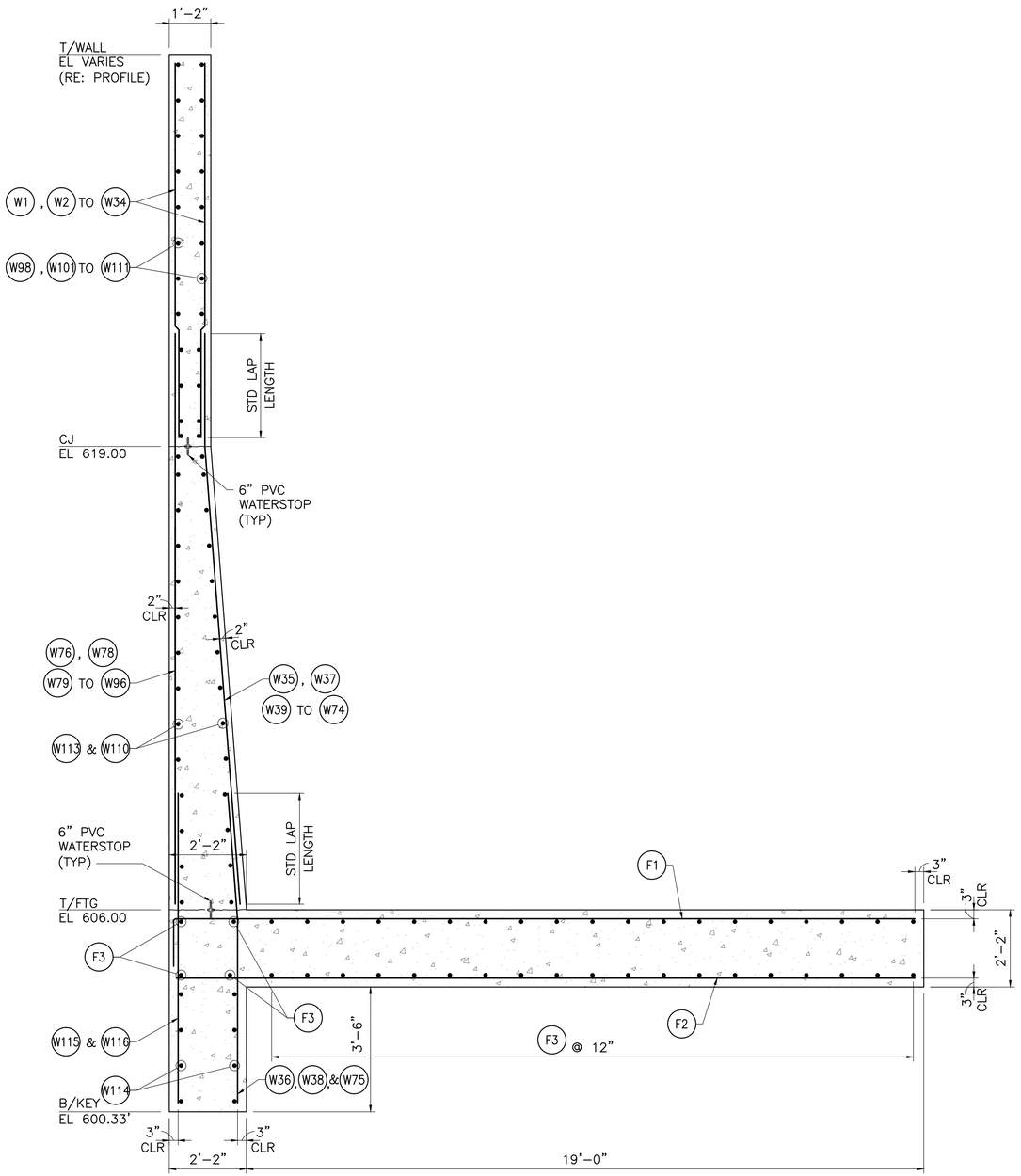

WINGWALL SECTION

0 1' 2' 4'

1/2"=1'-0"

Mark	Size (Bar #)	Quantity	Type	B (ft) (in)	C (ft) (in)	Length (ft) (in)	Total Length (ft) (in)
W1	6	20	ST	10-6	–	10-6	210-0
W2	6	4	ST	10-6	–	10-6	42-0
W3	6	4	ST	10-4	–	10-4	41-4
W4	6	4	ST	10-2	–	10-2	40-8
W5	6	4	ST	9-11	–	9-11	39-8
W6	6	4	ST	9-9	–	9-9	39-0
W7	6	4	ST	9-7	–	9-7	38-4
W8	6	4	ST	9-5	–	9-5	37-8
W9	6	4	ST	9-3	–	9-3	37-0
W10	6	4	ST	9-1	–	9-1	36-4
W11	6	4	ST	8-10	–	8-10	35-4
W12	6	4	ST	8-8	–	8-8	34-8
W13	6	4	ST	8-6	–	8-6	34-0
W14	6	4	ST	8-4	–	8-4	33-4
W15	6	4	ST	8-2	–	8-2	32-8
W16	6	4	ST	7-11	–	7-11	31-8
W17	6	4	ST	7-9	–	7-9	31-0
W18	6	4	ST	7-7	–	7-7	30-4
W19	6	4	ST	7-5	–	7-5	29-8
W20	6	4	ST	7-3	–	7-3	29-0
W21	6	4	ST	7-1	–	7-1	28-4
W22	6	4	ST	6-10	–	6-10	27-4
W23	6	4	ST	6-8	–	6-8	26-8
W24	6	4	ST	6-6	–	6-6	26-0
W25	6	4	ST	6-4	–	6-4	25-4
W26	6	4	ST	6-2	–	6-2	24-8
W27	6	4	ST	6-0	–	6-0	24-0
W28	6	4	ST	5-9	–	5-9	23-0
W29	6	4	ST	5-7	–	5-7	22-4
W30	6	4	ST	5-5	–	5-5	21-8
W31	6	4	ST	5-3	–	5-3	21-0
W32	6	4	ST	5-1	–	5-1	20-4
W33	6	4	ST	4-10	–	4-10	19-4
W34	6	4	ST	4-8	–	4-8	18-8
W35	8	18	BT1	12-10	2-3	15-1	271-6
W36	8	18	BT1	3-5	2-5	5-10	105-0
W37	8	128	BT1	12-10	2-3	15-1	1930-8
W38	8	128	BT1	3-5	5-2	8-7	1098-8
W39	8	2	BT1	12-10	4-10	17-8	35-4
W40	8	2	BT1	12-10	4-9	17-7	35-2
W41	8	2	BT1	12-10	4-8	17-6	35-0
W42	8	2	BT1	12-10	4-7	17-5	34-10
W43	8	2	BT1	12-10	4-6	17-4	34-8
W44	8	2	BT1	12-10	4-4	17-2	34-4
W45	8	2	BT1	12-10	4-3	17-1	34-2
W46	8	2	BT1	12-10	4-2	17-0	34-0
W47	8	2	BT1	12-10	4-1	16-11	33-10
W48	8	2	BT1	12-10	4-0	16-10	33-8
W49	8	2	BT1	12-10	3-11	16-9	33-6
W50	8	2	BT1	12-10	3-10	16-8	33-4
W51	8	2	BT1	12-10	3-9	16-7	33-2
W52	8	2	BT1	12-10	3-8	16-6	33-0
W53	8	2	BT1	12-10	3-7	16-5	32-10
W54	8	2	BT1	12-10	3-6	16-4	32-8
W55	8	2	BT1	12-10	3-5	16-3	32-6
W56	8	2	BT1	12-10	3-3	16-1	32-2
W57	8	2	BT1	12-10	3-2	16-0	32-0
W58	8	2	BT1	12-10	3-1	15-11	31-10
W59	8	2	BT1	12-10	3-0	15-10	31-8
W60	8	2	BT1	12-10	2-11	15-9	31-6
W61	8	2	BT1	12-10	2-10	15-8	31-4
W62	8	2	BT1	12-10	2-9	15-7	31-2
W63	8	2	BT1	12-10	2-8	15-6	31-0
W64	8	2	BT1	12-10	2-7	15-5	30-10
W65	8	2	BT1	12-10	2-6	15-4	30-8
W66	8	2	BT1	12-10	2-5	15-3	30-6
W67	8	2	BT1	12-10	2-4	15-2	30-4
W68	8	2	BT1	12-10	2-3	15-1	30-2
W69	8	2	BT1	12-10	2-1	14-11	29-10
W70	8	2	BT1	12-10	2-0	14-10	29-8
W71	8	2	BT1	12-10	1-11	14-9	29-6
W72	8	2	BT1	12-10	1-10	14-8	29-4
W73	8	2	BT1	12-10	1-9	14-7	29-2
W74	8	2	BT1	12-10	1-8	14-6	29-0
W75	8	72	BT1	3-5	5-2	8-7	618-0
W76	8	10	ST	15-0	–	15-0	150-0
W77	8	10	ST	5-7	–	5-7	55-10
W78	8	66	ST	15-0	–	15-0	990-0
W79	8	2	ST	17-7	–	17-7	35-2
W80	8	2	ST	17-5	–	17-5	34-10
W81	8	2	ST	17-3	–	17-3	34-6
W82	8	2	ST	17-1	–	17-1	34-2
W83	8	2	ST	16-11	–	16-11	33-10
W84	8	2	ST	16-8	–	16-8	33-4
W85	8	2	ST	16-6	–	16-6	33-0
W86	8	2	ST	16-4	–	16-4	32-8
W87	8	2	ST	16-2	–	16-2	32-4
W88	8	2	ST	16-0	–	16-0	32-0
W89	8	2	ST	15-10	–	15-10	31-8
W90	8	2	ST	15-7	–	15-7	31-2
W91	8	2	ST	15-5	–	15-5	30-10
W92	8	2	ST	15-3	–	15-3	30-6
W93	8	2	ST	15-1	–	15-1	30-2
W94	8	2	ST	14-11	–	14-11	29-10
W95	8	2	ST	14-9	–	14-9	29-6
W96	8	2	ST	14-6	–	14-6	29-0
W97	6	4	ST	50-4	–	50-4	201-4
W98	6	44	H	4-0	3-0	7-0	308-0
W99	6	8	H	4-0	3-0	7-0	56-0
W100	6	52	H	4-0	3-0	7-0	364-0
W101	6	4	ST	2-6	–	2-6	10-0
W102	6	4	ST	8-1	–	8-1	32-4
W103	6	4	ST	13-7	–	13-7	54-4
W104	6	4	ST	19-2	–	19-2	76-8
W105	6	4	ST	24-9	–	24-9	99-0
W106	6	4	ST	30-3	–	30-3	121-0
W107	6	4	ST	35-10	–	35-10	143-4
W108	6	4	ST	41-5	–	41-5	165-8
W109	6	4	ST	46-11	–	46-11	187-8
W110	6	4	ST	49-6	–	49-6	198-0
W111	6	4	ST	49-6	–	49-6	198-0
W112	6	4	ST	49-6	–	49-6	198-0
W113	6	52	ST	49-6	–	49-6	2574-0
W114	6	16	ST	49-6	–	49-6	792-0
W115	8	66	ST	8-10	–	8-10	583-0
W116	8	36	ST	8-10	–	8-10	318-0
F1	8	200	H	20-8	1-0	21-8	4333-4
F2	8	102	ST	20-8	–	20-8	2108-0
F3	6	88	ST	49-6	–	49-6	4356-0

NOTES:

1. REFER TO S-32 FOR BAR TYPES.

Prepared and Notarized by: Jim Prince, P.E. Texas Registered Engineering Firm F-2144

MICHAEL RAY ROBERTSON 59701 LICENSED PROFESSIONAL ENGINEER

04/24/15

DESIGNED BY: LB
DRAWN BY: JAW
CHECKED BY: MRR
FILE NAME: ST-LAB-SC-WING02.dwg
DATE CHECKED: 4/23/2015

STRUCTURAL
WINGWALL SECTIONS

FLOODWATER RETARDING STRUCTURE NO. 6 REHABILITATION
PLUM CREEK WATERSHED
OF THE
PLUM CREEK WATER, TEXAS

United States Department of Agriculture
Natural Resources Conservation Service

REVISIONS	DATE

DRAWING NO.
TX-EN-0650

SHEET
S-27

11/19/2014 2:15:41 P.M. LTS: 1.00 PSLTS: 1 TWIST: 0.0, 0.0, 0.0, 0.0, 0.0, 0.0, 0.0, 0.0, 0.0, 0.0
REFERENCE FILE: N:\STANDARD\2012\TX-NRC-FULL BORDER

Plot Date: 4/23/2015 5:26 PM Plot By: 02424 Filename: N:\ST\ST-LAB-SC-WING02.dwg

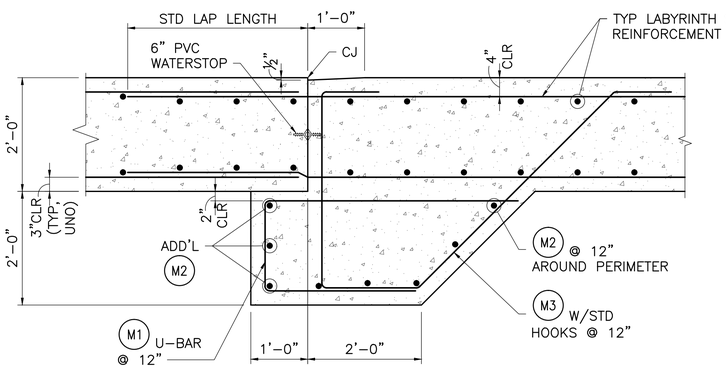

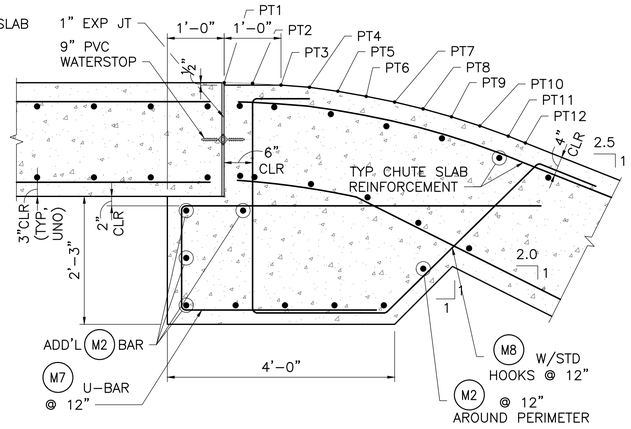

VERTICAL CURVE TABLE		
POINT	DISTANCE FROM U/S/ EDGE (ft)	ELEVATION (ft-msl)
PT1	0.0	624.80
PT2	0.5	624.79
PT3	1.0	624.76
PT4	1.5	624.72
PT5	2.0	624.65
PT6	2.5	624.56
PT7	3.0	624.46
PT8	3.5	624.34
PT9	4.0	624.20
PT10	4.5	624.04
PT11	5.0	623.86
PT12	5.3	623.74
Vertical Curve Equation: Y (ft-msl)$=624.8-X^2/26.57$		

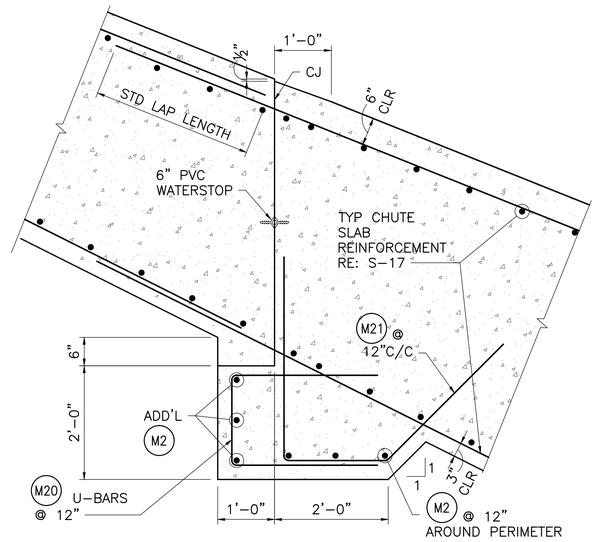

NOTE:
M2 BARS SHALL BE ADJUSTED AS REQUIRED TO FIT. ALL DEVELOPMENT AND LAP LENGTHS SHALL BE IN ACCORDANCE WITH S-1. (TYPICAL)

1 / S-3 LABYRINTH SLAB CONSTRUCTION JOINT DETAIL
0 6" 1' 2'
3/4"=1'-0

2 / S-3 SLAB EXPANSION JOINT DETAIL
0 6" 1' 2'
3/4"=1'-0

3 / S-17 CHUTE SLAB CONSTRUCTION JOINT DETAIL
0 6" 1' 2'
3/4"=1'-0

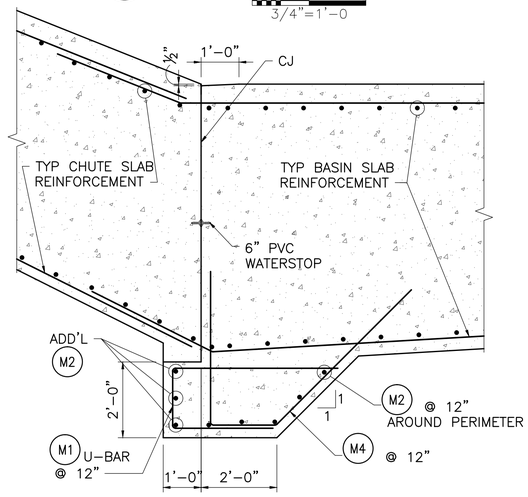

4 / S-17 BASIN SLAB CONSTRUCTION JOINT DETAIL
0 1' 2' 4'
1/2"=1'-0"

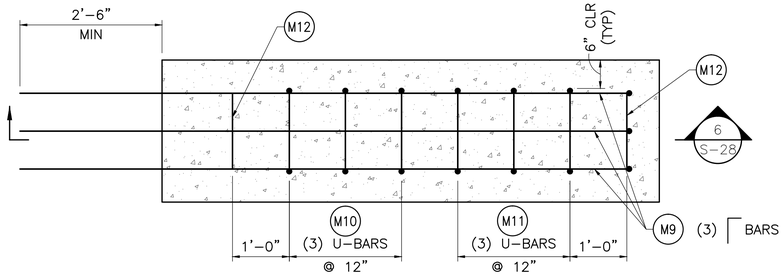

5 / S-17 CHUTE BLOCK PLAN
0 6" 1' 2'
3/4"=1'-0

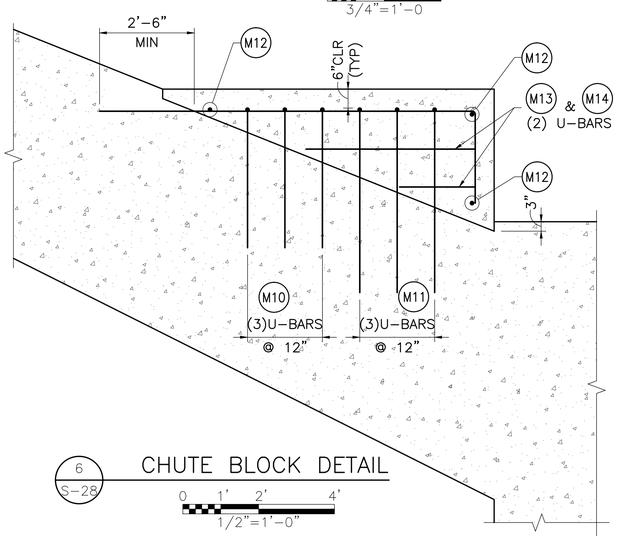

6 / S-28 CHUTE BLOCK DETAIL
0 1' 2' 4'
1/2"=1'-0"

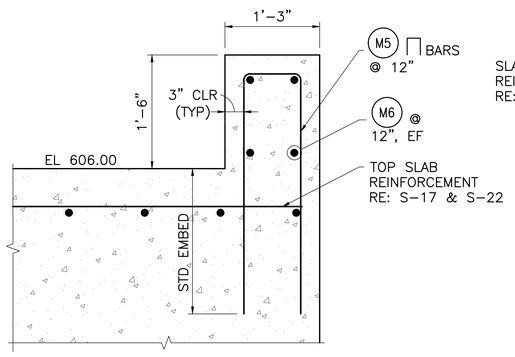

7 / S-17 END SILL DETAIL
0 6" 1' 2'
1"=1'-0"

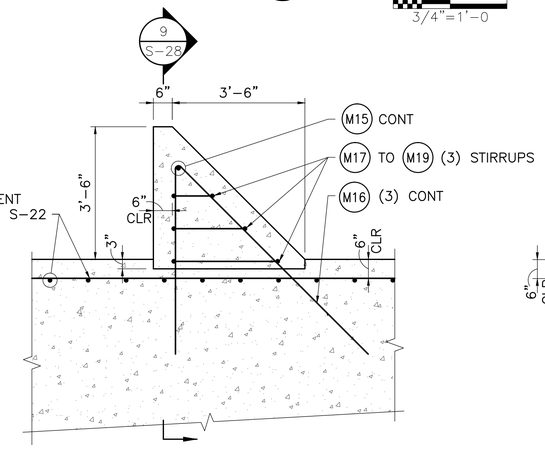

8 / S-17 BAFFLE BLOCK DETAIL
0 1' 2' 4'
1/2"=1'-0"

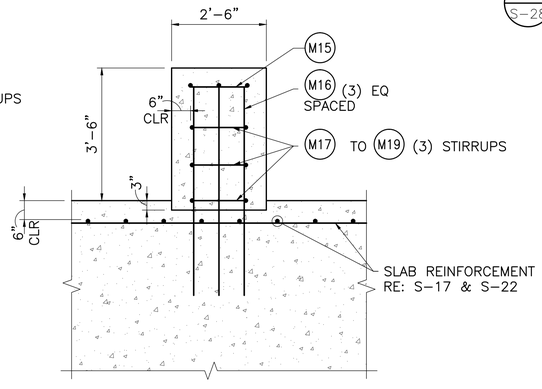

9 / S-28 BAFFLE BLOCK SECTION
0 1' 2' 4'
1/2"=1'-0"

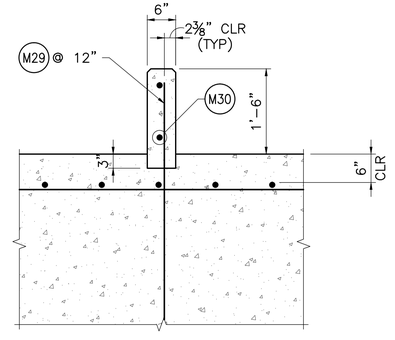

10 / S-2 PILOT CHANNEL DETAIL
0 6" 1' 2'
3/4"=1'-0

Prepared for: Richards, Tim Firm: F-2144
Texas Registered Engineering Practice
MICHAEL RAY ROBERTSON 97012
LICENSED PROFESSIONAL ENGINEER
04/24/15

DESIGNED BY: LB
DRAWN BY: JAW
CHECKED BY: MRR
FILE NAME: ST-LAB-SC-REIN01.dwg
DATE CHECKED: 4/23/2015

STRUCTURAL
SECTIONS AND DETAILS

FLOODWATER RETARDING STRUCTURE NO. 6 REHABILITATION
PLUM CREEK WATERSHED
OF THE
PLUM CREEK WATER, TEXAS

United States Department of Agriculture
Natural Resources Conservation Service

REVISIONS DATE

DRAWING NO.
TX-EN-0650

SHEET
S-28

Last Saved: 4/23/2015 3:49 PM Saved By: 02424

Plot Date: 4/23/2015 5:27 PM Plot By: 02424 Filename: N:\ST\ST-LAB-SC-REIN01.dwg

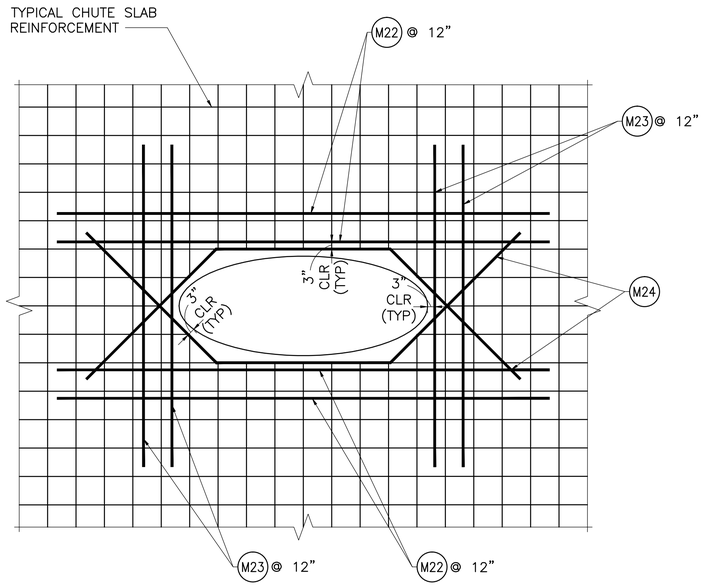

1 S-2 TOP MAT
PIPE PENETRATION REINFORCEMENT

0 1' 2' 4'
3/8"=1'-0

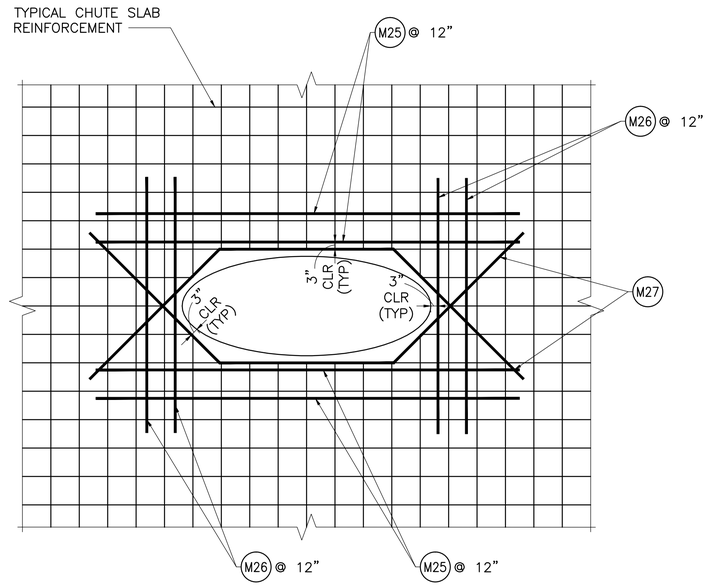

2 S-2 BOTTOM MAT
PIPE PENETRATION REINFORCEMENT

0 1' 2' 4'
3/8"=1'-0

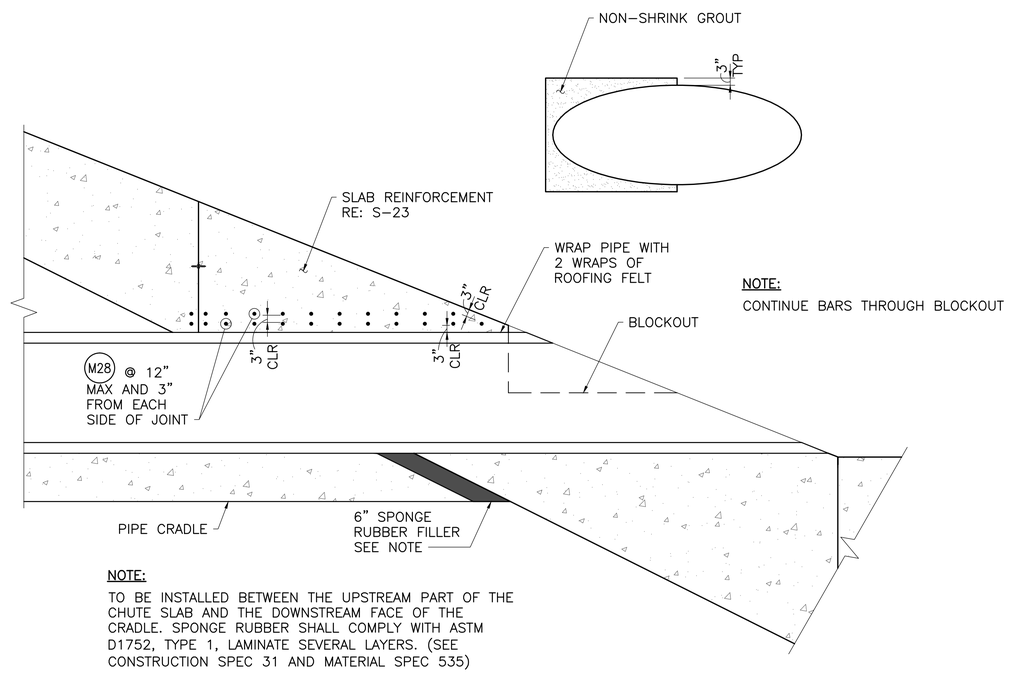

NOTE:
CONTINUE BARS THROUGH BLOCKOUT

NOTE:
TO BE INSTALLED BETWEEN THE UPSTREAM PART OF THE CHUTE SLAB AND THE DOWNSTREAM FACE OF THE CRADLE. SPONGE RUBBER SHALL COMPLY WITH ASTM D1752, TYPE 1, LAMINATE SEVERAL LAYERS. (SEE CONSTRUCTION SPEC 31 AND MATERIAL SPEC 535)

3 S-2 PIPE PENETRATION

0 1' 2' 4'
3/8"=1'-0

Plot Date: 4/23/2015 5:27 PM Plot By: 02424 Filename: N:\ST\ST-LAB-SC-PIPE01.dwg
Last Saved: 4/23/2015 3:46 PM Saved By: 02424

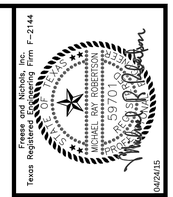

DESIGNED BY: LB
DRAWN BY: JAW
CHECKED BY: MRR
FILE NAME: ST-LAB-SC-PIPE01.dwg
DATE CHECKED: 4/23/2015

STRUCTURAL
PIPE PENETRATION REINFORCEMENT

FLOODWATER RETARDING STRUCTURE NO. 6 REHABILITATION
PLUM CREEK WATERSHED
OF THE
PLUM CREEK WATER, TEXAS

NRCS
United States Department of Agriculture
Natural Resources Conservation Service

REVISIONS DATE

DRAWING NO.
TX-EN-0650

SHEET
S-29

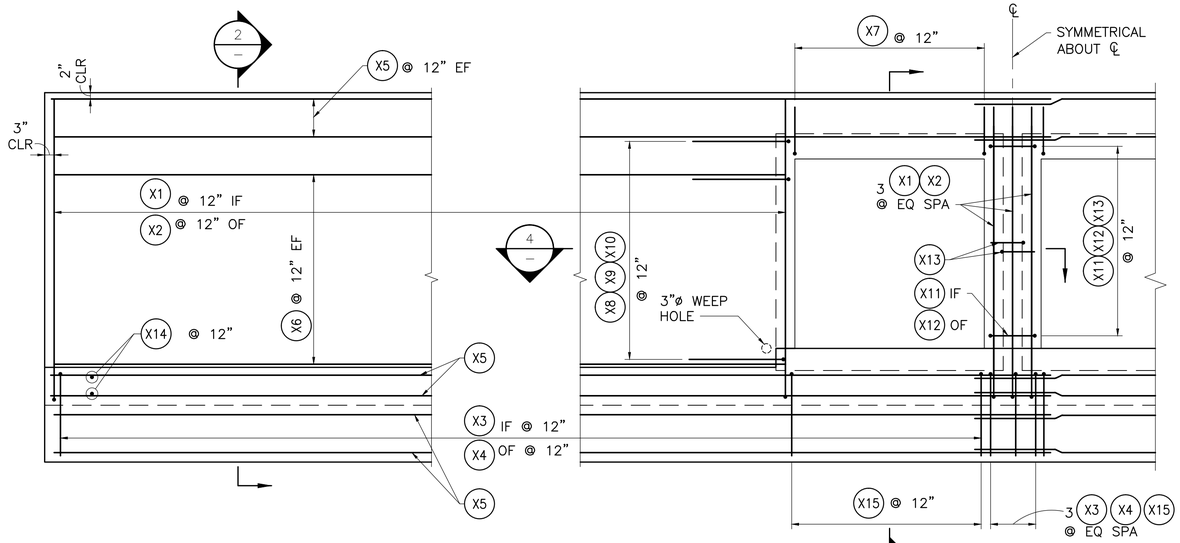

1 C-35 CULVERT OUTLET HEADWALL ELEVATION

0 1' 2' 4'
1/2"=1'-0"

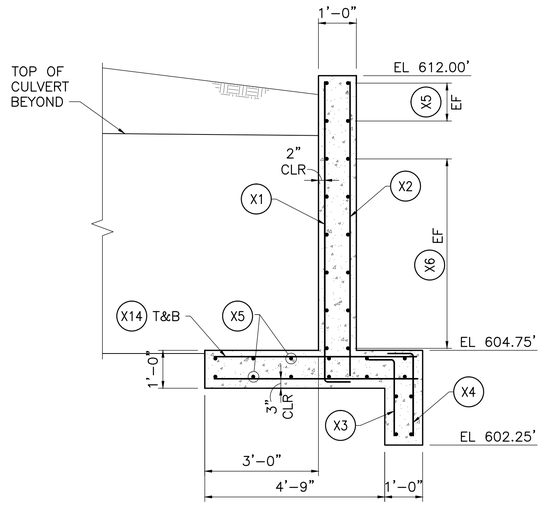

2 SECTION

0 1' 2' 4'
1/2"=1'-0"

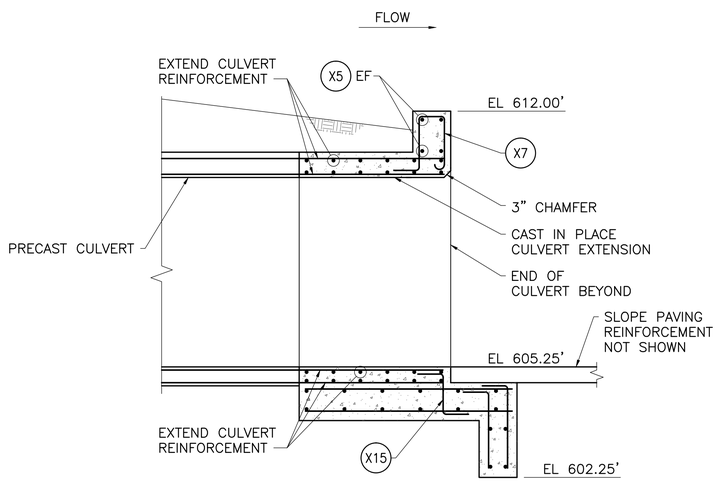

3 SECTION

0 1' 2' 4'
1/2"=1'-0"

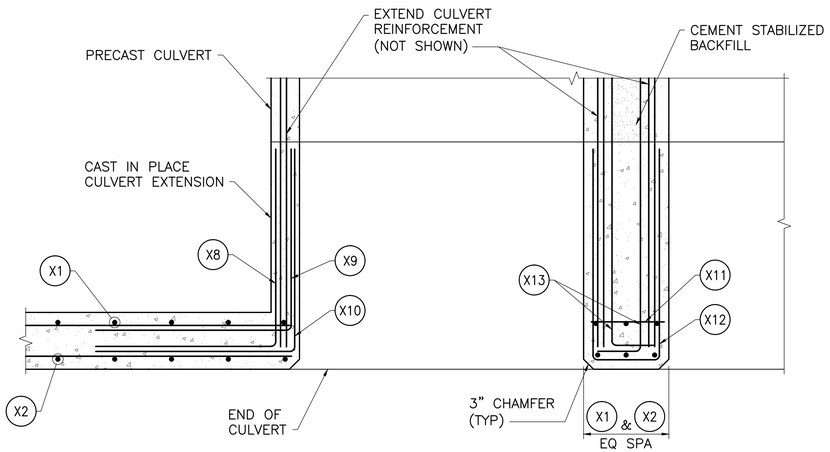

4 SECTION

0 6" 1' 2'
3/4"=1'-0

NOTES:

1. BOXES SHALL BE CAST SHORT OR BROKEN BACK IN FIELD.
2. CEMENT STABILIZED BACKFILL BETWEEN BOXES IS CONSIDERED PART OF THE BOX CULVERT PAYMENT.
3. FILL AROUND WEEP HOLE WITH COARSE FILTER. SEE DETAIL H ON SHEET C-34.

Freese and Nichols, Inc.
Texas Registered Engineering Firm F-2144

STATE OF TEXAS
MICHAEL RAY ROBERTSON
59701
REGISTERED PROFESSIONAL ENGINEER
04/24/15

DESIGNED BY: MMT
DRAWN BY: JAW
CHECKED BY: MRR
FILE NAME: ST-CUL-DT-CONC01.dwg
DATE CHECKED: 4/23/2015

STRUCTURAL
PRINCIPAL SPILLWAY CULVERT OUTLET

FLOODWATER RETARDING STRUCTURE NO. 6 REHABILITATION
PLUM CREEK WATERSHED
OF THE
PLUM CREEK WATER, TEXAS

NRCS
United States Department of Agriculture
Natural Resources Conservation Service

REVISIONS DATE

DRAWING NO.
TX-EN-0650

SHEET
S-30

Last Saved: 4/23/2015 3:45 PM Saved By: 02424

Plot Date: 4/23/2015 5:27 PM Plot By: 02424 Filename: N:\ST\ST-CUL-DT-CONC01.dwg

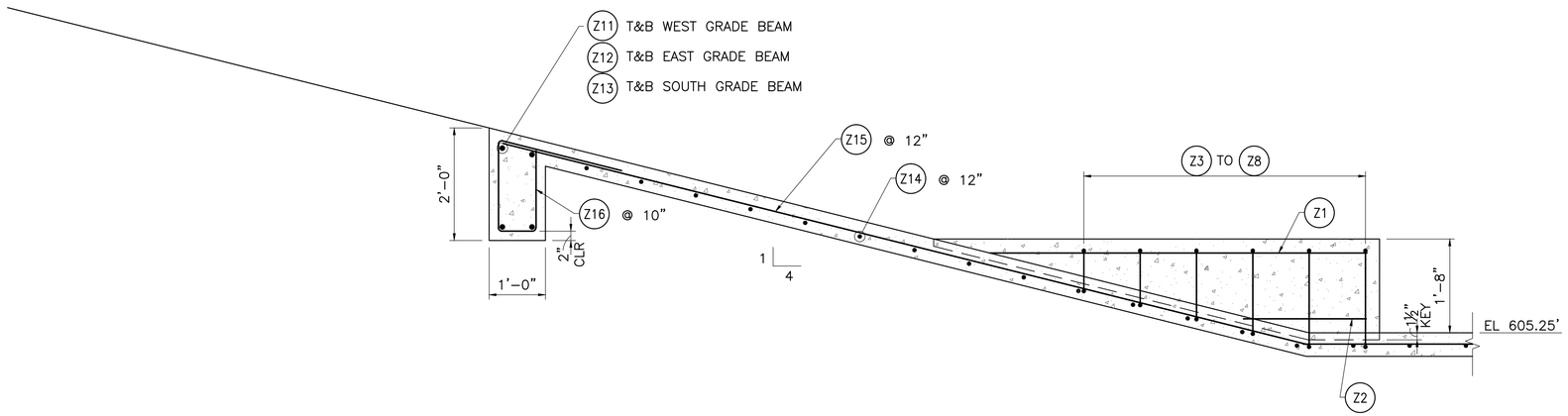

1 C-35 DOWNSTREAM BLOCK SECTION

0 6" 1' 2'
3/4"=1'-0

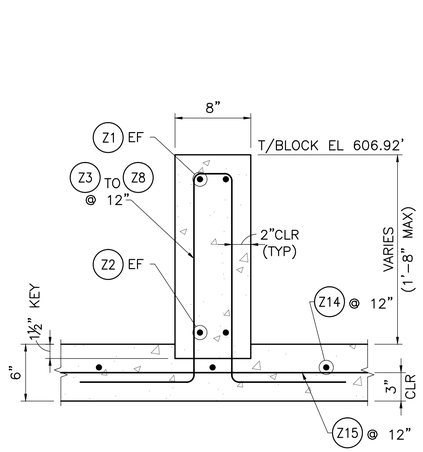

2 C-35 DOWNSTREAM BLOCK

0 4" 8" 1'
1-1/2"=1'-0"

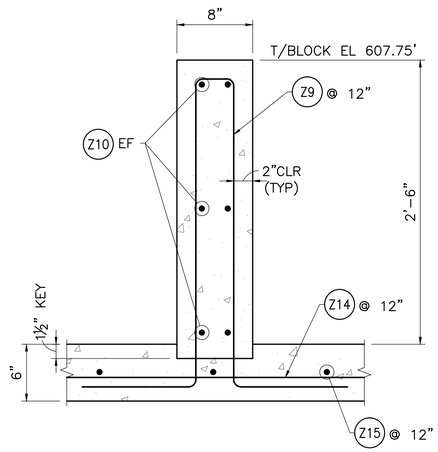

3 C-35 UPSTREAM BLOCK

0 4" 8" 1'
1-1/2"=1'-0"

Mark	Size (Bar #)	Quantity	Type	B (ft) (in)	C (ft) (in)	D (ft) (in)	E (ft) (in)	Length (ft) (in)	Total Length (ft) (in)
X1	5	53	H	7-10	0-8	–	–	8-6	450-6
X2	5	53	ST	7-10	–	–	–	7-10	415-2
X3	5	63	H	2-1	0-8	–	–	2-9	173-3
X4	5	63	H	2-1	0-8	–	–	2-9	173-3
X5	5	40	ST	31-0	–	–	–	31-0	1240-0
X6	5	24	ST	24-0	–	–	–	24-0	576-0
X7	5	12	UT4	0-8	1-6	0-8	0-4	5-1	61-0
X8	6	14	H	3-8	4-0	–	–	7-8	107-4
X9	6	14	H	3-0	4-0	–	–	7-0	98-0
X10	6	14	H	3-8	4-0	–	–	7-8	107-4
X11	5	6	ST	1-2	–	–	–	1-2	7-0
X12	6	6	U	1-2	3-8	3-8	–	8-6	51-0
X13	6	12	H	3-8	0-9	–	–	4-5	53-0
X14	5	126	ST	5-3	–	–	–	5-3	661-6
X15	5	13	Z	1-1	0-8	0-8	–	2-5	31-5
Z1	4	20	ST	3-8	–	–	–	3-8	73-4
Z2	4	6	ST	3-8	–	–	–	3-8	22-0
Z3	4	11	HP	0-4	1-9	1-9	1-0	5-10	64-2
Z4	4	2	HP	0-4	1-9	1-9	1-0	5-10	11-8
Z5	4	2	HP	0-4	1-5	1-5	1-0	5-2	10-4
Z6	4	2	HP	0-4	1-2	1-2	1-0	4-8	9-4
Z7	4	2	HP	0-4	0-11	0-11	1-0	4-2	8-4
Z8	4	2	HP	0-4	0-8	0-8	1-0	3-8	7-4
Z9	4	6	HP	0-4	2-9	2-9	1-0	7-10	47-0
Z10	4	12	ST	2-2	–	–	–	2-2	26-0
Z11	6	4	ST	14-8	–	–	–	14-8	58-8
Z12	6	4	ST	17-0	–	–	–	17-0	68-0
Z13	6	8	ST	27-0	–	–	–	27-0	216-0
Z14	4	52	ST	14-8	–	–	–	14-8	762-8
Z15	4	28	ST	27-0	–	–	–	27-0	756-0
Z16	3	100	SQR	0-8	1-7	1-5	2-2	5-10	583-4

NOTES:
1. REFER TO S-32 FOR BAR TYPES.

Texas Registered Engineering Firm F-2144
Freese and Nichols, Inc.
MICHAEL RAY ROBERTSON
59701
LICENSED PROFESSIONAL ENGINEER
04/24/15

DESIGNED BY: LB
DRAWN BY: JAW
CHECKED BY: MRR
FILE NAME: ST-CUL-DT-CONC02.dwg
DATE CHECKED: 4/23/2015

STRUCTURAL
DOWNSTREAM BLOCK SECTIONS AND DETAILS
FLOODWATER RETARDING STRUCTURE NO. 6 REHABILITATION
PLUM CREEK WATERSHED
OF THE
PLUM CREEK WATER, TEXAS

United States Department of Agriculture
Natural Resources Conservation Service

REVISIONS DATE

DRAWING NO.
TX-EN-0650

SHEET
S-31

Last Saved: 4/23/2015 2:17 PM Saved By: 02424
Plot Date: 4/23/2015 5:28 PM Plot By: 02424 Filename: N:\ST\ST-CUL-DT-CONC02.dwg

Mark	Size (Bar #)	Quantity	Type	B (ft) (in)	C (ft) (in)	D (ft) (in)	E (ft) (in)	Length (ft) (in)	Total Length (ft) (in)	Total Weight (lb)
M1	6	452	U	1-7	2-6	4-3	-	8-4	3766-8	5,650
M2	6	228	ST	32-0	-	-	-	32-0	7296-0	10,944
M3	6	226	UT1	1-7	3-5	4-10	0-9	10-7	2391-10	3,588
M4	6	226	UT2	1-6	4-0	5-0	-	10-6	2373-0	3,560
M5	6	203	U	0-9	2-9	2-9	-	6-3	1268-9	1,903
M6	6	28	ST	32-0	-	-	-	32-0	896-0	1,344
M7	6	226	U	1-10	3-6	5-4	-	10-8	2410-8	3,616
M8	6	226	UT2	2-4	3-8	3-8	0-9	10-5	2354-2	3,531
M9	6	123	H	11-3	2-6	-	-	13-9	1691-3	2,537
M10	6	123	U	1-6	3-0	3-0	-	7-6	922-6	1,384
M11	6	123	U	1-6	5-8	5-8	-	12-10	1578-6	2,368
M12	6	123	ST	1-6	-	-	-	1-6	184-6	277
M13	6	41	U	1-6	4-6	1-6	-	7-6	307-6	461
M14	6	41	U	1-6	2-0	1-6	-	5-0	205-0	308
M15	6	41	ST	1-6	-	-	-	1-6	61-6	92
M16	6	123	UT3	4-9	5-10	-	-	11-2	1373-6	2,060
M17	6	41	SQ	1-0	1-6	1-0	1-6	5-0	205-0	308
M18	6	41	SQ	1-10	1-6	1-10	1-6	6-8	273-4	410
M19	6	41	SQ	2-9	1-6	2-9	1-6	8-6	348-6	523
M20	6	226	U	1-7	2-6	2-6	-	6-7	1487-10	2,232
M21	6	226	UT2	1-11	3-7	3-0	-	8-6	1921-0	2,882
M22	7	4	ST	17-4	-	-	-	17-4	69-4	141
M23	7	4	ST	11-3	-	-	-	11-3	45-0	92
M24	7	2	V	7-2	5-9	5-9	-	18-8	37-4	76
M25	6	4	ST	14-2	-	-	-	14-2	56-8	85
M26	6	4	ST	8-1	-	-	-	8-1	32-4	49
M27	6	2	V	7-2	5-3	5-3	-	17-8	35-4	53
M28	6	21	ST	6-0	-	-	-	6-0	126-0	189
M29	5	30	ST	3-2	-	-	-	3-2	95-0	99
M30	5	4	ST	29-6	-	-	-	29-6	118-0	123

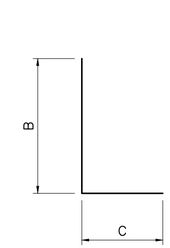

TYPE H

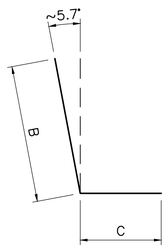

TYPE BTH

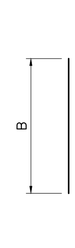

TYPE ST

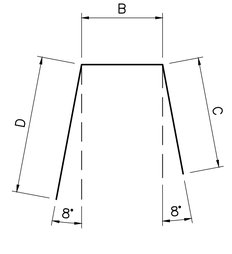

TYPE BB

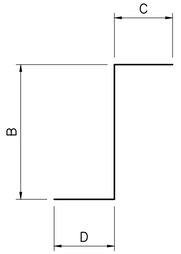

TYPE Z

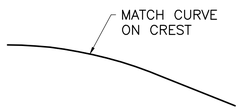

TYPE ST1

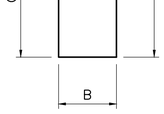

TYPE U

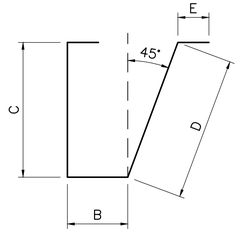

TYPE UT1

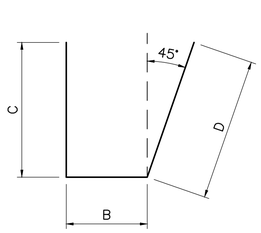

TYPE UT2

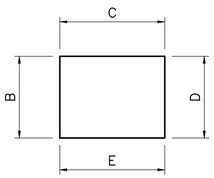

TYPE SQ

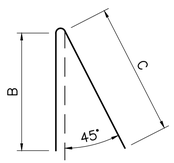

TYPE UT3

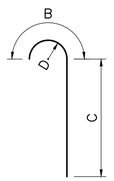

TYPE R

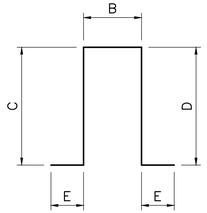

TYPE HP

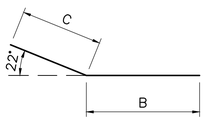

TYPE ST2

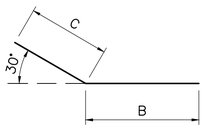

TYPE ST3

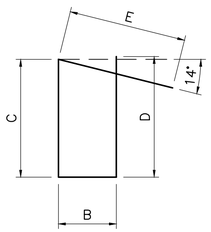

TYPE SQR

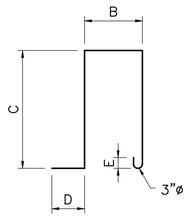

TYPE UT4

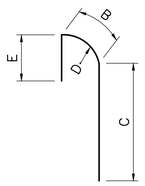

TYPE RH

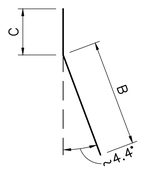

TYPE BT1

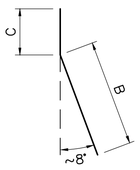

TYPE BT2

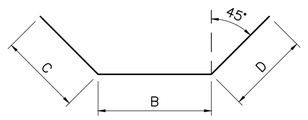

TYPE V

Prepared or Approved by, Firm F-2144
Texas Registered Engineering
MICHAEL RAY ROBERTSON
59701
LICENSED PROFESSIONAL ENGINEER
04/24/15

DESIGNED BY: LB
DRAWN BY: JAW
CHECKED BY: MRR
FILE NAME: ST-LAB-SH-TABL01.dwg
DATE CHECKED: 4/23/2015

MISC REINFORCING STEEL TABLE & BAR TYPES
FLOODWATER RETARDING STRUCTURE NO. 6 REHABILITATION
PLUM CREEK WATERSHED
OF THE
PLUM CREEK WATER, TEXAS

NRCS
United States Department of Agriculture
Natural Resources Conservation Service

REVISIONS DATE

DRAWING NO.
TX-EN-0650

SHEET
S-32

Last Saved: 4/23/2015 2:18 PM Saved By: 02424

Plot Date: 4/23/2015 5:28 PM Plot By: 02424 Filename: N:\ST\ST-LAB-SH-TABL01.dwg

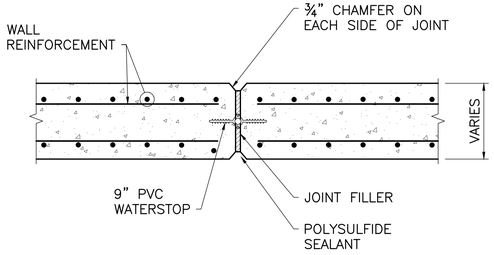

1 SPILLWAY TRAINING WALL TYPICAL EXPANSION JOINT
NOT TO SCALE

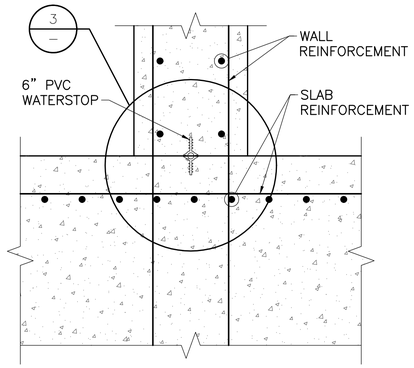

2 TYPICAL WALL CONSTRUCTION JOINT
NOT TO SCALE

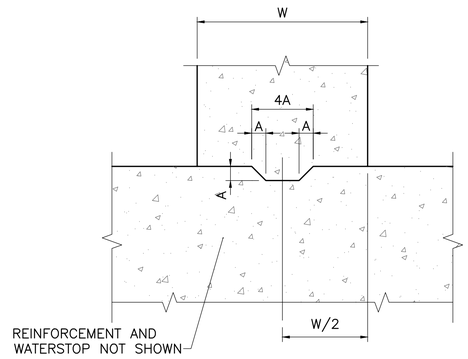

3 DETAIL
NOT TO SCALE

DIMENSION OF KEYS	
W	A
12" TO 17"	1.5"
18" TO 23"	2.0"
24" TO 32"	2.5"
33" TO 42"	3.0"

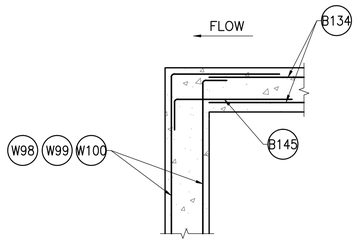

DETAIL NOTES:

1. REINFORCING SHOWN APPLIES TO ALL TOP, BOTTOM AND SIDE BARS. ALL REQUIRED BARS ARE NOT SHOWN IN DETAIL.
2. AT CONTRACTOR'S OPTION, UNLESS NOTED OTHERWISE, ELIMINATE DOWELS AND CORNER BAR AND TERMINATE HORIZONTAL BARS WITH STANDARD HOOKS.

4 BASIN TO WINGWALL CORNER REINFORCEMENT
NOT TO SCALE

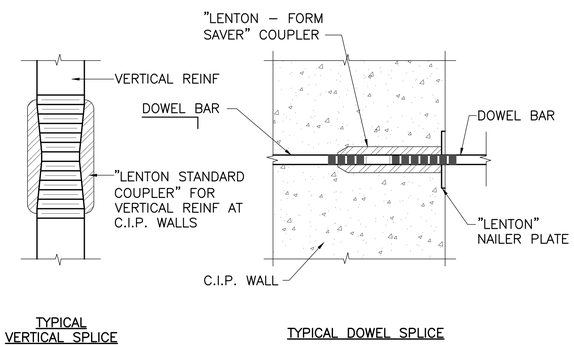

TYPICAL VERTICAL SPLICE

TYPICAL DOWEL SPLICE

5 OPTIONAL REINFORCING SPLICE
NOT TO SCALE

Freese and Nichols, Inc.
Texas Registered Engineering Firm F-2144
STATE OF TEXAS
MICHAEL RAY ROBERTSON
59701
REGISTERED PROFESSIONAL ENGINEER
04/24/15

DESIGNED BY: LB
DRAWN BY: JAW
CHECKED BY: MRR
FILE NAME: ST-LABY-DT-TYPL01.dwg
DATE CHECKED: 4/23/2015

STRUCTURAL STANDARD DETAILS
FLOODWATER RETARDING STRUCTURE NO. 6 REHABILITATION
PLUM CREEK WATERSHED
OF THE
PLUM CREEK WATER, TEXAS

NRCS
United States Department of Agriculture
Natural Resources Conservation Service

REVISIONS DATE

DRAWING NO.
TX-EN-0650

SHEET
S-33

Last Saved: 4/23/2015 2:31 PM Saved By: 02424

Plot Date: 4/23/2015 5:28 PM Plot By: 02424 Filename: N:\ST\ST-LABY-DT-TYPL01.dwg

DISCLAIMER:
The use of this standard is governed by the "Texas Engineering Practice Act". No warranty of any kind is made by TxDOT for any purpose whatsoever. TxDOT assumes no responsibility for the conversion of this standard to other formats or for incorrect results or damages resulting from its use.

BARRICADE AND CONSTRUCTION (BC) STANDARD SHEETS GENERAL NOTES:

1. The Barricade and Construction Standard Sheets (BC sheets) are intended to show typical examples for placement of temporary traffic control devices, construction pavement markings, and typical work zone signs. The information contained in these sheets meet or exceed the requirements shown in the "Texas Manual on Uniform Traffic Control Devices" (TMUTCD).

2. The development and design of the Traffic Control Plan (TCP)is the responsibility of the Engineer.

3. The Contractor may propose changes to the TCP that are signed and sealed by a licensed professional engineer for approval. The Engineer may develop, sign and seal Contractor proposed changes.

4. The Contractor is responsible for installing and maintaining the traffic control devices as shown in the plans. The Contractor may not move or change the approximate location of any device without the approval of the Engineer.

5. Geometric design of lane shifts and detours should, when possible, meet the applicable design criteria contained in manuals such as the American Association of State Highway and Transportation Officials (AASHTO), "A Policy on Geometric Design of Highways and Streets," the TxDOT "Roadway Design Manual" or engineering judgment.

6. When projects abut, the Engineer(s) may omit the END ROAD WORK, TRAFFIC FINES DOUBLE, and other advance warning signs if the signing would be redundant and the work areas appear continuous to the motorists. If the adjacent project is completed first, the Contractor shall erect the necessary warning signs as shown on these sheets, the TCP sheets or as directed by the Engineer. The BEGIN ROAD WORK NEXT X MILES sign shall be revised to show appropriate work zone distance.

7. The Engineer may require duplicate warning signs on the median side of divided highways where median width will permit and traffic volumes justify the signing.

8. All signs shall be constructed in accordance with the details found in the "Standard Highway Sign Designs for Texas," latest edition. Sign details not shown in this manual shall be shown in the plans or the Engineer shall provide a detail to the Contractor before the sign is manufactured.

9. The temporary traffic control devices shown in the illustrations of the BC sheets are examples. As necessary, the Engineer will determine the most appropriate traffic control devices to be used.

10. As shown on BC(2), the OBEY WARNING SIGNS STATE LAW sign, STAY ALERT TALK OR TEXT LATER (see Sign Detail G20-10T) and the WORK ZONE TRAFFIC FINES DOUBLE sign with plaque shall be erected in advance of the CSJ limits. However, the TRAFFIC FINES DOUBLE sign will not be required on projects consisting solely of mobile operation work, such as striping or milling edgeline rumble strips. The BEGIN ROAD WORK NEXT X MILES, CONTRACTOR and END ROAD WORK signs shall be erected at or near the CSJ limits.

11. Except for devices required by Note 10, traffic control devices should be in place only while work is actually in progress or a definite need exists.

12. The Engineer has the final decision on the location of all traffic control devices.

13. Inactive equipment and work vehicles, including workers' private vehicles must be parked away from travel lanes. They should be as close to the right-of-way line as possible, or located behind a barrier or guardrail, or as approved by the Engineer.

WORKER SAFETY APPAREL NOTES:

1. Workers on foot who are exposed to traffic or to construction equipment within the right-of-way shall wear high-visibility safety apparel meeting the requirements of ISEA "American National Standard for High-Visibility Apparel," or equivalent revisions, and labeled as ANSI 107-2004 standard performance for Class 2 or 3 risk exposure. Class 3 garments should be considered for high traffic volume work areas or night time work.

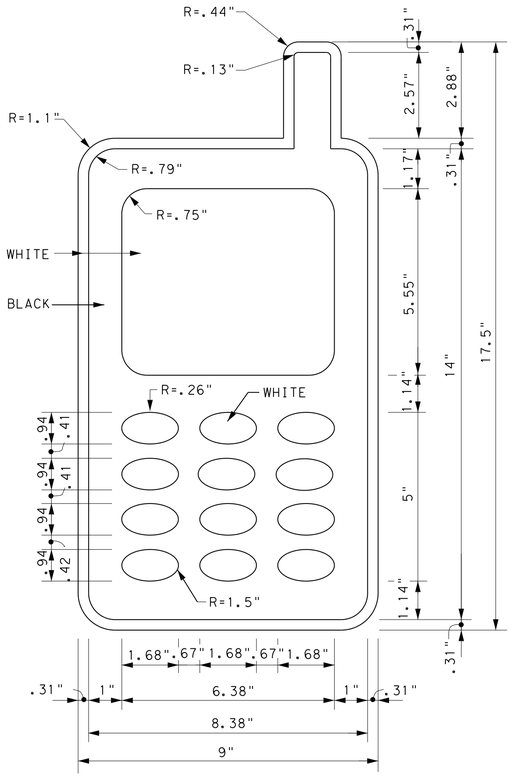



3.0" Radius, 1.25" Border, 0.75" Indent, Black on Yellow;
[STAY ALERT] Font: D
3.0" Radius, 1.25" Border, 0.75" Indent, Black on Orange;
[TALK OR TEXT LATER] Font: C specified length;

SIGN DETAIL (G20-10T)

Only pre-qualified products shall be used. The "Compliant Work Zone Traffic Control Devices List" (CWZTCD) describes pre-qualified products and their sources and may be found on-line at the web address given below or by contacting:

Texas Department of Transportation
Traffic Operations Division - TE
Phone (512) 416-3118

THE DOCUMENTS BELOW CAN BE FOUND ON-LINE AT http://www.txdot.gov
COMPLIANT WORK ZONE TRAFFIC CONTROL DEVICES LIST (CWZTCD)
DEPARTMENTAL MATERIAL SPECIFICATIONS (DMS)
MATERIAL PRODUCER LIST (MPL)
ROADWAY DESIGN MANUAL - SEE "MANUALS (ONLINE MANUALS)"
STANDARD HIGHWAY SIGN DESIGNS FOR TEXAS (SHSD)
TEXAS MANUAL ON UNIFORM TRAFFIC CONTROL DEVICES (TMUTCD)
TRAFFIC ENGINEERING STANDARD SHEETS

Texas Department of Transportation | Traffic Operations Division Standard

BARRICADE AND CONSTRUCTION GENERAL NOTES AND REQUIREMENTS

BC(1)-14

FILE: bc-14.dgn	DN: TxDOT	CK: TxDOT	DW: TxDOT	CK: TxDOT
© TxDOT November 2002	CONT	SECT	JOB	HIGHWAY
REVISIONS				
4-03 5-10 8-14	DIST	COUNTY		SHEET NO.
9-07 7-13				

DATE:
FILE:

DISCLAIMER:
The use of this standard is governed by the "Texas Engineering Practice Act". No warranty of any kind is made by TxDOT for any purpose whatsoever. TxDOT assumes no responsibility for the conversion of this standard to other formats or for incorrect results or damages resulting from its use.

DATE:
FILE:

TYPICAL LOCATION OF CROSSROAD SIGNS

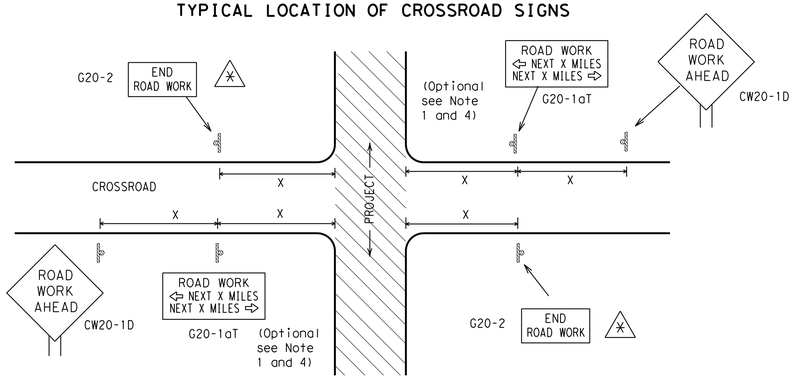

(*) May be mounted on back of "ROAD WORK AHEAD"(CW20-1D) sign with approval of Engineer. (See note 2 below)

1. The typical minimum signing on a crossroad approach should be a "ROAD WORK AHEAD" (CW20-1D)sign and a (G20-2) "END ROAD WORK" sign, unless noted otherwise in plans.
2. The Engineer may use the reduced size 36" x 36" ROAD WORK AHEAD (CW20-1D) sign mounted back to back with the reduced size 36" x 18" "END ROAD WORK"(G20-2) sign on low volume crossroads (see Note 4 under "Typical Construction Warning Sign Size and Spacing"). See the "Standard Highway Sign Designs for Texas" manual for sign details. The Engineer may omit the advance warning signs on low volume crossroads. The Engineer will determine whether a road is low volume. This information shall be shown in the plans.
3. Based on existing field conditions, the Engineer/Inspector may require additional signs such as FLAGGER AHEAD, LOOSE GRAVEL, or other appropriate signs. When additional signs are required, these signs will be considered part of the minimum requirements. The Engineer/Inspector will determine the proper location and spacing of any sign not shown on the BC sheets, Traffic Control Plan sheets or the Work Zone Standard Sheets.
4. The "ROAD WORK NEXT X MILES"(G20-1aT)sign shall be required at high volume crossroads to advise motorists of the length of construction in either direction from the intersection. The Engineer will determine whether a roadway is considered high volume.
5. Additional traffic control devices may be shown elsewhere in the plans for higher volume crossroads.
6. When work occurs in the intersection area, appropriate traffic control devices, as shown elsewhere in the plans or as determined by the Engineer/Inspector, shall be in place.

T-INTERSECTION

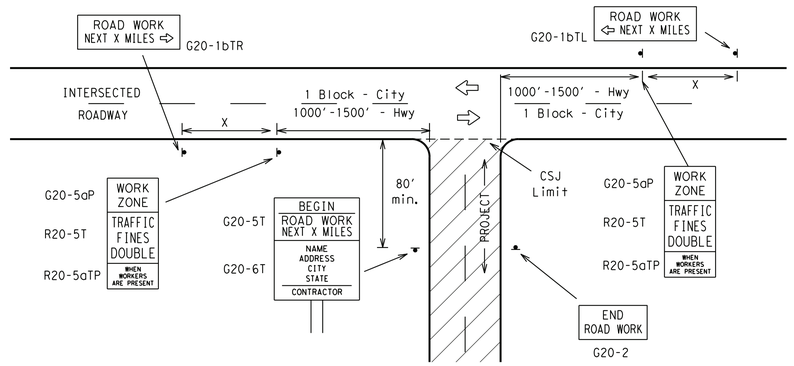

CSJ LIMITS AT T-INTERSECTION

1. The Engineer will determine the types and location of any additional traffic control devices, such as a flagger and accompanying signs, or other signs, that should be used when work is being performed at or near an intersection.
2. If construction closes the road at a T-intersection the Contractor shall place the "CONTRACTOR NAME"(G20-6T) sign behind the Type 3 Barricades for the road closure (see BC(10) also). The "ROAD WORK NEXT X MILES" left arrow(G20-1bTL) and "ROAD WORK NEXT X MILES" right arrow (G20-1bTR)" signs shall be replaced by the detour signing called for in the plans.

TYPICAL CONSTRUCTION WARNING SIGN SIZE AND SPACING[1,5,6]

SIZE

Sign Number or Series	Conventional Road	Expressway/ Freeway
CW20[4] CW21 CW22 CW23 CW25	48" x 48"	48" x 48"
CW1, CW2, CW7, CW8, CW9, CW11, CW14	36" x 36"	48" x 48"
CW3, CW4, CW5, CW6, CW8-3, CW10, CW12	48" x 48"	48" x 48"

SPACING

Posted Speed	Sign Spacing "X" (△)
MPH	Feet (Apprx.)
30	120
35	160
40	240
45	320
50	400
55	500[2]
60	600[2]
65	700[2]
70	800[2]
75	900[2]
80	1000[2]
*	*[3]

(*) For typical sign spacings on divided highways, expressways and freeways, see Part 6 of the "Texas Manual on Uniform Traffic Control Devices" (TMUTCD) typical application diagrams or TCP Standard Sheets.

△ Minimum distance from work area to first Advance Warning sign nearest the work area and/or distance between each additional sign.

GENERAL NOTES

1. Special or larger size signs may be used as necessary.
2. Distance between signs should be increased as required to have 1500 feet advance warning.
3. Distance between signs should be increased as required to have 1/2 mile or more advance warning.
4. 36" x 36" "ROAD WORK AHEAD" (CW20-1D)signs may be used on low volume crossroads at the discretion of the Engineer. See Note 2 under "Typical Location of Crossroad Signs".
5. Only diamond shaped warning sign sizes are indicated.
6. See sign size listing in "TMUTCD", Sign Appendix or the "Standard Highway Sign Designs for Texas" manual for complete list of available sign design sizes.

WORK AREAS IN MULTIPLE LOCATIONS WITHIN CSJ LIMITS

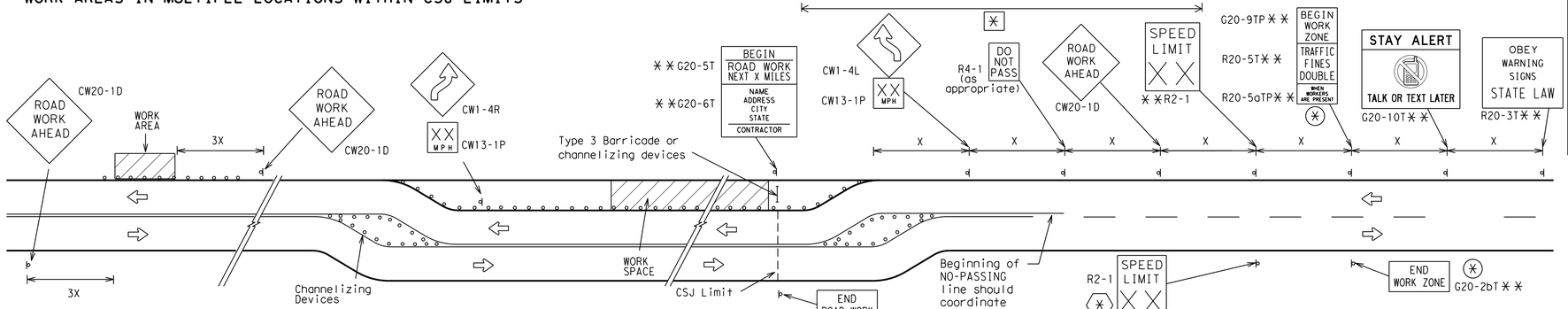

When extended distances occur between minimal work spaces, the Engineer/Inspector should ensure additional "ROAD WORK AHEAD"(CW20-1D)signs are placed in advance of these work areas to remind drivers they are still within the project limits. See the applicable TCP sheets for exact location and spacing of signs and channelizing devices.

SAMPLE LAYOUT OF SIGNING FOR WORK BEGINNING DOWNSTREAM OF THE CSJ LIMITS

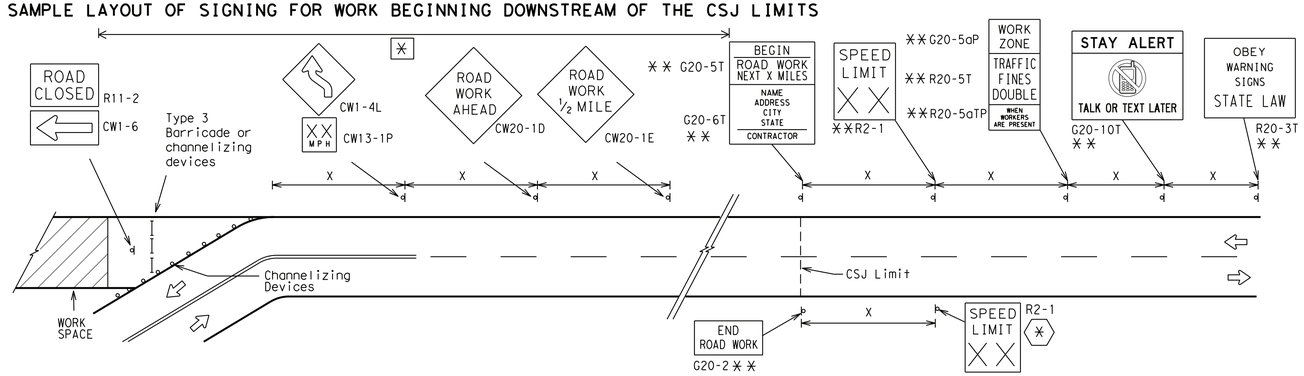

NOTES

The Contractor shall determine the appropriate distance to be placed on the G20-1 series signs and "BEGIN ROAD WORK NEXT X MILES"(G20-5T)sign for each specific project. This distance shall replace the "X" and shall be rounded to the nearest whole mile with the approval of the Engineer. No decimals shall be used.

(*) The "BEGIN WORK ZONE"(G20-9TP) and "END WORK ZONE" (G20-2bT) shall be used as shown on the sample layout when advance signs are required outside the CSJ Limits. They inform the motorist of entering or leaving a part of the work zone lying outside the CSJ Limits where traffic fines may double if workers are present.

** Required CSJ Limit signing. See Note 10 on BC(1). TRAFFIC FINES DOUBLE signs will not be required on projects consisting solely of mobile operations work.

[*] Area for placement of "ROAD WORK AHEAD" (CW20-1D)sign and other signs or devices as called for on the Traffic Control Plan.

(*) Contractor will install a regulatory speed limit sign at the end of the work zone.

LEGEND	
⊢⊣	Type 3 Barricade
○ ○ ○	Channelizing Devices
▬	Sign
X	See Typical Construction Warning Sign Size and Spacing chart or the TMUTCD for sign spacing requirements.

Texas Department of Transportation

Traffic Operations Division Standard

BARRICADE AND CONSTRUCTION PROJECT LIMIT

BC(2)-14

FILE: bc-14.dgn	DN: TxDOT	CK: TxDOT	DW: TxDOT	CK: TxDOT
©TxDOT November 2002	CONT	SECT	JOB	HIGHWAY
REVISIONS 9-07 8-14 7-13	DIST	COUNTY		SHEET NO.

DISCLAIMER:
The use of this standard is governed by the "Texas Engineering Practice Act". No warranty of any kind is made by TxDOT for any purpose whatsoever. TxDOT assumes no responsibility for the conversion of this standard to other formats or for incorrect results or damages resulting from its use.

DATE:
FILE:

TYPICAL APPLICATION OF WORK ZONE SPEED LIMIT SIGNS

Work zone speed limits shall be regulatory, established in accordance with the "Procedures for Establishing Speed Zones," and approved by the Texas Transportation Commission, or by City Ordinance when within Incorporated City Limits.

Reduced speeds should only be posted in the vicinity of work activity and not throughout the entire project.

Regulatory work zone speed signs (R2-1) shall be removed or covered during periods when they are not needed.

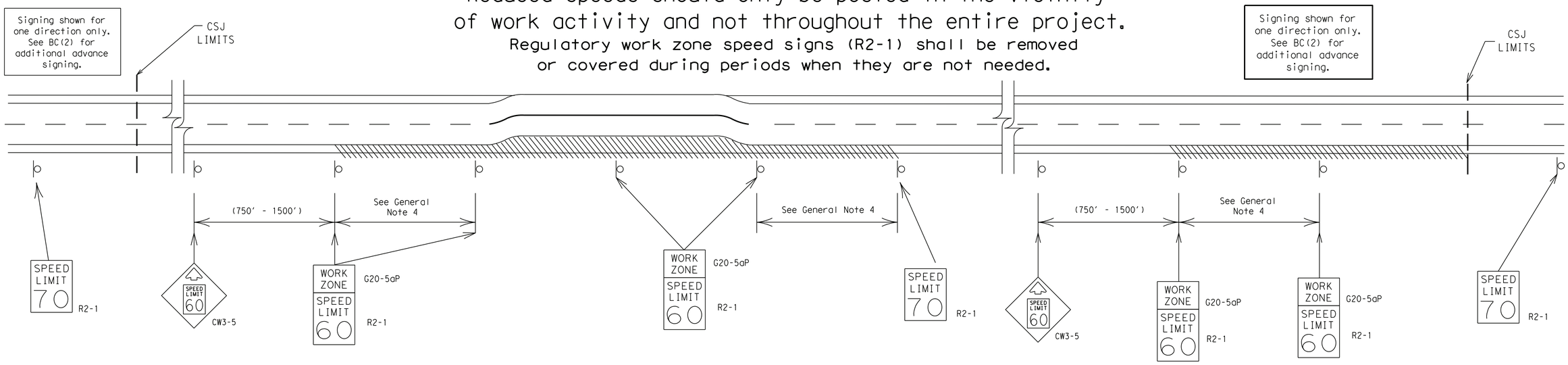

GUIDANCE FOR USE:

LONG/INTERMEDIATE TERM WORK ZONE SPEED LIMITS

This type of work zone speed limit should be included on the design of the traffic control plans when restricted geometrics with a lower design speed are present in the work zone and modification of the geometrics to a higher design speed is not feasible.

Long/Intermediate Term Work Zone Speed Limit signs, when approved as described above, should be posted and visible to the motorist when work activity is present. Work activity may also be defined as a change in the roadway that requires a reduced speed for motorists to safely negotiate the work area, including:

a) rough road or damaged pavement surface
b) substantial alteration of roadway geometrics (diversions)
c) construction detours
d) grade
e) width
f) other conditions readily apparent to the driver

As long as any of these conditions exist, the work zone speed limit signs should remain in place.

SHORT TERM WORK ZONE SPEED LIMITS

This type of work zone speed limit may be included on the design of the traffic control plans when workers or equipment are not behind concrete barrier, when work activity is within 10 feet of the traveled way or actually in the travelled way.

Short Term Work Zone Speed Limit signs should be posted and visible to the motorists only when work activity is present. When work activity is not present, signs shall be removed or covered.
(See Removing or Covering on BC(4)).

GENERAL NOTES

1. Regulatory work zone speed limits should be used only for sections of construction projects where speed control is of major importance.
2. Regulatory work zone speed limit signs shall be placed on supports at a 7 foot minimum mounting height.
3. Speed zone signs are illustrated for one direction of travel and are normally posted for each direction of travel.
4. Frequency of work zone speed limit signs should be:
   40 mph and greater 0.2 to 2 miles
   35 mph and less 0.2 to 1 mile
5. Regulatory speed limit signs shall have black legend and border on a white reflective background (See "Reflective Sheeting" on BC(4)).
6. Fabrication, erection and maintenance of the"ADVANCE SPEED LIMIT"(CW3-5)sign, "WORK ZONE"(G20-5aP) plaque and the "SPEED LIMIT"(R2-1)signs shall not be paid for directly, but shall be considered subsidiary to Item 502.
7. Turning signs from view, laying signs over or down will not be allowed, unless as otherwise noted under "REMOVING OR COVERING" on BC(4).
8. Techniques that may help reduce traffic speeds include but are not limited to:
   A. Law enforcement.
   B. Flagger stationed next to sign.
   C. Portable changeable message sign (PCMS).
   D. Low-power (drone) radar transmitter.
   E. Speed monitor trailers or signs.
9. Speeds shown on details above are for illustration only. Work Zone Speed Limits should only be posted as approved for each project.
10. For more specific guidance concerning the type of work, work zone conditions and factors impacting allowable regulatory construction speed zone reduction see TxDOT form #1204 in the TxDOT e-form system.

Texas Department of Transportation

Traffic Operations Division Standard

BARRICADE AND CONSTRUCTION WORK ZONE SPEED LIMIT

BC(3)-14

FILE: bc-14.dgn	DN: TxDOT	CK: TxDOT	DW: TxDOT	CK: TxDOT
©TxDOT November 2002	CONT	SECT	JOB	HIGHWAY
REVISIONS 9-07 8-14 7-13	DIST	COUNTY		SHEET NO.

DISCLAIMER:
The use of this standard is governed by the "Texas Engineering Practice Act". No warranty of any kind is made by TxDOT for any purpose whatsoever. TxDOT assumes no responsibility for the conversion of this standard to other formats or for incorrect results or damages resulting from its use.

TYPICAL MINIMUM CLEARANCES FOR LONG TERM AND INTERMEDIATE TERM SIGNS

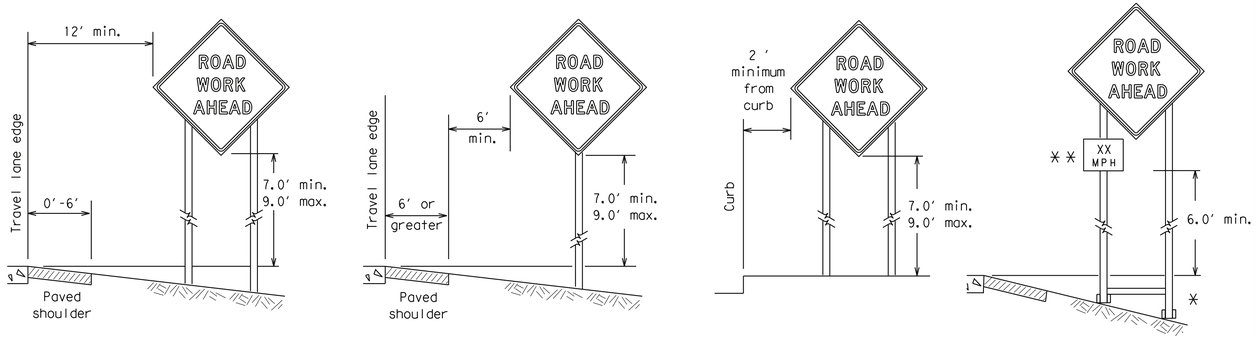

⁎ When placing skid supports on unlevel ground, the leg post lengths must be adjusted so the sign appears straight and plumb. Objects shall NOT be placed under skids as a means of leveling.

⁎⁎ When plaques are placed on dual-leg supports, they should be attached to the upright nearest the travel lane. Supplemental plaques (advisory or distance) should not cover the surface of the parent sign.

ATTACHMENT FOR SIGN SUPPORTS

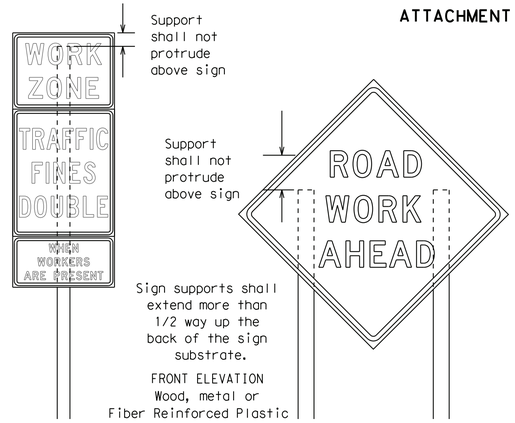

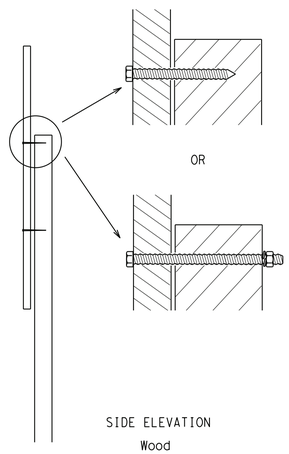

Attachment to wooden supports will be by bolts and nuts or screws. Use TxDOT's or manufacturer's recommended procedures for attaching sign substrates to other types of sign supports

Nails shall NOT be allowed. Each sign shall be attached directly to the sign support. Multiple signs shall not be joined or spliced by any means. Wood supports shall not be extended or repaired by splicing or other means.

Splicing embedded perforated square metal tubing in order to extend post height will only be allowed when the splice is made using four bolts, two above and two below the spice point. Splice must be located entirely behind the sign substrate, not near the base of the support. Splice insert lengths should be at least 5 times nominal post size, centered on the splice and of at least the same gauge material.

STOP/SLOW PADDLES

1. STOP/SLOW paddles are the primary method to control traffic by flaggers. The STOP/SLOW paddle size should be 24" x 24" as detailed below.
2. When used at night, the STOP/SLOW paddle shall be retroreflectorized.
3. STOP/SLOW paddles may be attached to a staff with a minimum length of 6′ to the bottom of the sign.
4. Any lights incorporated into the STOP or SLOW paddle faces shall only be as specifically described in Section 6E.03 Hand Signaling Devices in the TMUTCD.

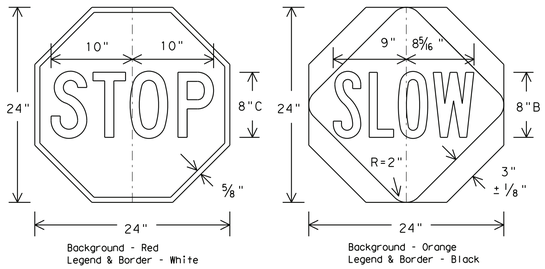

CONTRACTOR REQUIREMENTS FOR MAINTAINING PERMANENT SIGNS WITHIN THE PROJECT LIMITS

1. Permanent signs are used to give notice of traffic laws or regulations, call attention to conditions that are potentially hazardous to traffic operations, show route designations, destinations, directions, distances, services, points of interest, and other geographical, recreational, or cultural information. Drivers proceeding through a work zone need the same, if not better route guidance as normally installed on a roadway without construction.
2. When permanent regulatory or warning signs conflict with work zone conditions, remove or cover the permanent signs until the permanent sign message matches the roadway condition.
3. When existing permanent signs are moved and relocated due to construction purposes, they shall be visible to motorists at all times.
4. If existing signs are to be relocated on their original supports, they shall be installed on crashworthy bases as shown on the SMD Standard sheets. The signs shall meet the required mounting heights shown on the BC Sheets or the SMD Standards. This work should be paid for under the appropriate pay item for relocating existing signs.
5. If permanent signs are to be removed and relocated using temporary supports, the Contractor shall use crashworthy supports as shown on the BC sheets or the CWZTCD. The signs shall meet the required mounting heights shown on the BC Sheets or the SMD Standards during construction. This work should be paid for under the appropriate pay item for relocating existing signs.
6. Any sign or traffic control device that is struck or damaged by the Contractor or his/her construction equipment shall be replaced as soon as possible by the Contractor to ensure proper guidance for the motorists. This will be subsidiary to Item 502.

GENERAL NOTES FOR WORK ZONE SIGNS

1. Contractor shall install and maintain signs in a straight and plumb condition and/or as directed by the Engineer.
2. Wooden sign posts shall be painted white.
3. Barricades shall NOT be used as sign supports.
4. All signs shall be installed in accordance with the plans or as directed by the Engineer. Signs shall be used to regulate, warn, and guide the traveling public safely through the work zone.
5. The Contractor may furnish either the sign design shown in the plans or in the "Standard Highway Sign Designs for Texas" (SHSD). The Engineer/Inspector may require the Contractor to furnish other work zone signs that are shown in the TMUTCD but may have been omitted from the plans. Any variation in the plans shall be documented by written agreement between the Engineer and the Contractor's Responsible Person. All changes must be documented in writing before being implemented. This can include documenting the changes in the Inspector's TxDOT diary and having both the Inspector and Contractor initial and date the agreed upon changes.
6. The Contractor shall furnish sign supports listed in the "Compliant Work Zone Traffic Control Device List" (CWZTCD). The Contractor shall install the sign support in accordance with the manufacturer's recommendations. If there is a question regarding installation procedures, the Contractor shall furnish the Engineer a copy of the manufacturer's installation recommendations so the Engineer can verify the correct procedures are being followed.
7. The Contractor is responsible for installing signs on approved supports and replacing signs with damaged or cracked substrates and/or damaged or marred reflective sheeting as directed by the Engineer/Inspector.
8. Identification markings may be shown only on the back of the sign substrate. The maximum height of letters and/or company logos used for identification shall be 1 inch.
9. The Contractor shall replace damaged wood posts. New or damaged wood sign posts shall not be spliced.

DURATION OF WORK (as defined by the "Texas Manual on Uniform Traffic Control Devices" Part 6)

1. The types of sign supports, sign mounting height, the size of signs, and the type of sign substrates can vary based on the type of work being performed. The Engineer is responsible for selecting the appropriate size sign for the type of work being performed. The Contractor is responsible for ensuring the sign support, sign mounting height and substrate meets manufacturer's recommendations in regard to crashworthiness and duration of work requirements.
   a. Long-term stationary - work that occupies a location more than 3 days.
   b. Intermediate-term stationary - work that occupies a location more than one daylight period up to 3 days, or nighttime work lasting more than one hour.
   c. Short-term stationary - daytime work that occupies a location for more than 1 hour in a single daylight period.
   d. Short, duration - work that occupies a location up to 1 hour.
   e. Mobile - work that moves continuously or intermittently (stopping for up to approximately 15 minutes.)

SIGN MOUNTING HEIGHT

1. The bottom of Long-term/Intermediate-term signs shall be at least 7 feet, but not more than 9 feet, above the paved surface, except as shown for supplemental plaques mounted below other signs.
2. The bottom of Short-term/Short Duration signs shall be a minimum of 1 foot above the pavement surface but no more than 2 feet above the ground.
3. Long-term/Intermediate-term Signs may be used in lieu of Short-term/Short Duration signing.
4. Short-term/Short Duration signs shall be used only during daylight and shall be removed at the end of the workday or raised to appropriate Long-term/Intermediate sign height.
5. Regulatory signs shall be mounted at least 7 feet, but not more than 9 feet, above the paved surface regardless of work duration.

SIZE OF SIGNS

1. The Contractor shall furnish the sign sizes shown on BC (2) unless otherwise shown in the plans or as directed by the Engineer.

SIGN SUBSTRATES

1. The Contractor shall ensure the sign substrate is installed in accordance with the manufacturer's recommendations for the type of sign support that is being used. The CWZTCD lists each substrate that can be used on the different types and models of sign supports.
2. "Mesh" type materials are NOT an approved sign substrate, regardless of the tightness of the weave.
3. All wooden individual sign panels fabricated from 2 or more pieces shall have one or more plywood cleat, 1/2" thick by 6" wide, fastened to the back of the sign and extending fully across the sign. The cleat shall be attached to the back of the sign using wood screws that do not penetrate the face of the sign panel. The screws shall be placed on both sides of the splice and spaced at 6" centers. The Engineer may approve other methods of splicing the sign face.

REFLECTIVE SHEETING

1. All signs shall be retroreflective and constructed of sheeting meeting the color and retro-reflectivity requirements of DMS-8300 for rigid signs or DMS-8310 for roll-up signs. The web address for DMS specifications is shown on BC(1).
2. White sheeting, meeting the requirements of DMS-8300 Type A, shall be used for signs with a white background.
3. Orange sheeting, meeting the requirements of DMS-8300 Type B_{FL} or Type C_{FL}, shall be used for rigid signs with orange backgrounds.

SIGN LETTERS

1. All sign letters and numbers shall be clear, and open rounded type uppercase alphabet letters as approved by the Federal Highway Administration (FHWA) and as published in the "Standard Highway Sign Design for Texas" manual. Signs, letters and numbers shall be of first class workmanship in accordance with Department Standards and Specifications.

REMOVING OR COVERING

1. When sign messages may be confusing or do not apply, the signs shall be removed or completely covered.
2. Long-term stationary or intermediate stationary signs installed on square metal tubing may be turned away from traffic 90 degrees when the sign message is not applicable. This technique may not be used for signs installed in the median of divided highways or near any intersections where the sign may be seen from approaching traffic.
3. Signs installed on wooden skids shall not be turned at 90 degree angles to the roadway. These signs should be removed or completely covered when not required.
4. When signs are covered, the material used shall be opaque, such as heavy mil black plastic, or other materials which will cover the entire sign face and maintain their opaque properties under automobile headlights at night, without damaging the sign sheeting.
5. Burlap shall NOT be used to cover signs.
6. Duct tape or other adhesive material shall NOT be affixed to a sign face.
7. Signs and anchor stubs shall be removed and holes backfilled upon completion of work.

SIGN SUPPORT WEIGHTS

1. Where sign supports require the use of weights to keep from turning over, the use of sandbags with dry, cohesionless sand should be used.
2. The sandbags will be tied shut to keep the sand from spilling and to maintain a constant weight.
3. Rock, concrete, iron, steel or other solid objects shall not be permitted for use as sign support weights.
4. Sandbags should weigh a minimum of 35 lbs and a maximum of 50 lbs.
5. Sandbags shall be made of a durable material that tears upon vehicular impact. Rubber (such as tire inner tubes) shall NOT be used.
6. Rubber ballasts designed for channelizing devices should not be used for ballast on portable sign supports. Sign supports designed and manufactured with rubber bases may be used when shown on the CWZTCD list.
7. Sandbags shall only be placed along or laid over the base supports of the traffic control device and shall not be suspended above ground level or hung with rope, wire, chains or other fasteners. Sandbags shall be placed along the length of the skids to weigh down the sign support.
8. Sandbags shall NOT be placed under the skid and shall not be used to level sign supports placed on slopes.

FLAGS ON SIGNS

1. Flags may be used to draw attention to warning signs. When used the flag shall be 16 inches square or larger and shall be orange or fluorescent red-orange in color. Flags shall not be allowed to cover any portion of the sign face.

Texas Department of Transportation

Traffic Operations Division Standard

BARRICADE AND CONSTRUCTION TEMPORARY SIGN NOTES

BC(4)-14

FILE: bc-14.dgn	DN: TxDOT	CK: TxDOT	DW: TxDOT	CK: TxDOT
©TxDOT November 2002	CONT	SECT	JOB	HIGHWAY
REVISIONS				
9-07 8-14	DIST	COUNTY		SHEET NO.
7-13				

DATE:
FILE:

DISCLAIMER:
The use of this standard is governed by the "Texas Engineering Practice Act". No warranty of any kind is made by TxDOT for any purpose whatsoever. TxDOT assumes no responsibility for the conversion of this standard to other formats or for incorrect results or damages resulting from its use.

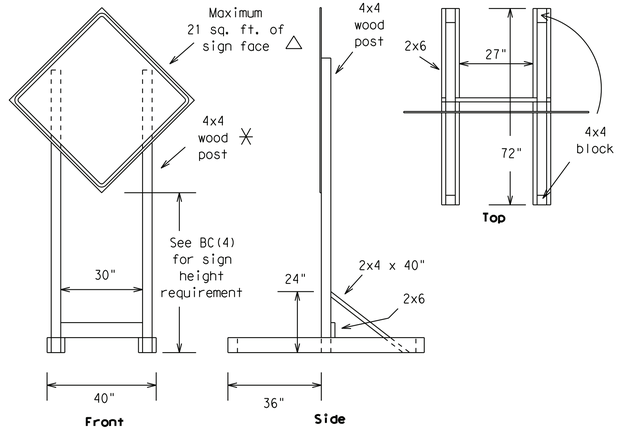

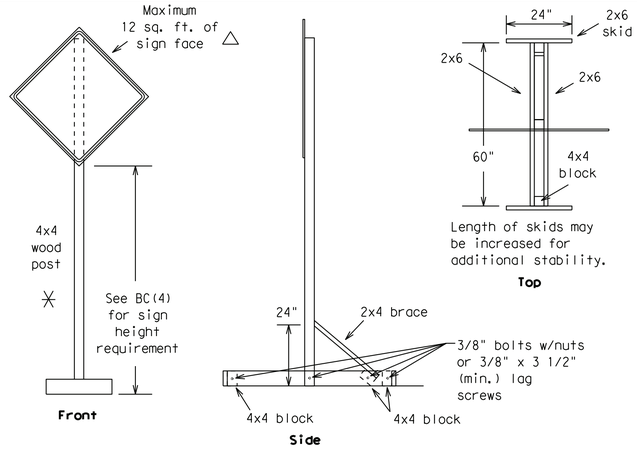

SKID MOUNTED WOOD SIGN SUPPORTS

LONG/INTERMEDIATE TERM STATIONARY - PORTABLE SKID MOUNTED SIGN SUPPORTS □

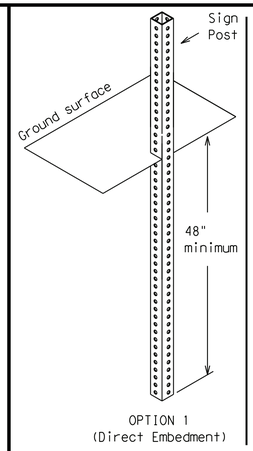

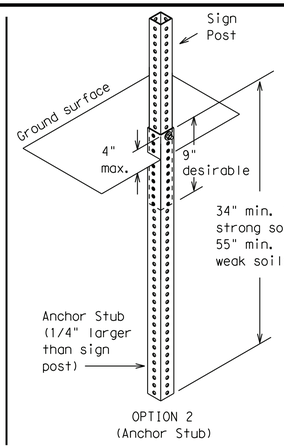

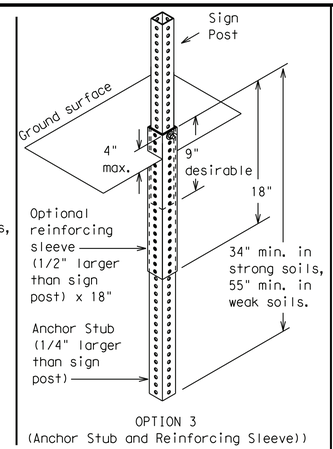

PERFORATED SQUARE METAL TUBING

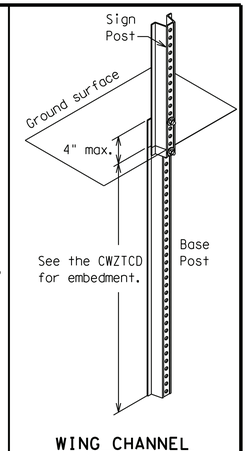

WING CHANNEL
Lap-splice/base bolted anchor

GROUND MOUNTED SIGN SUPPORTS

Refer to the CWZTCD and the manufacturer's installation procedure for each type sign support.
The maximum sign square footage shall adhere to the manufacturer's recommendation.
Two post installations can be used for larger signs.

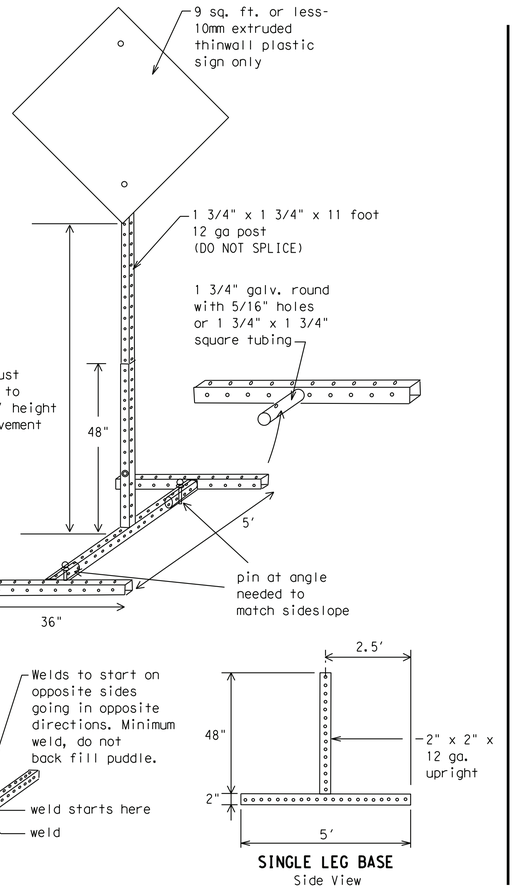

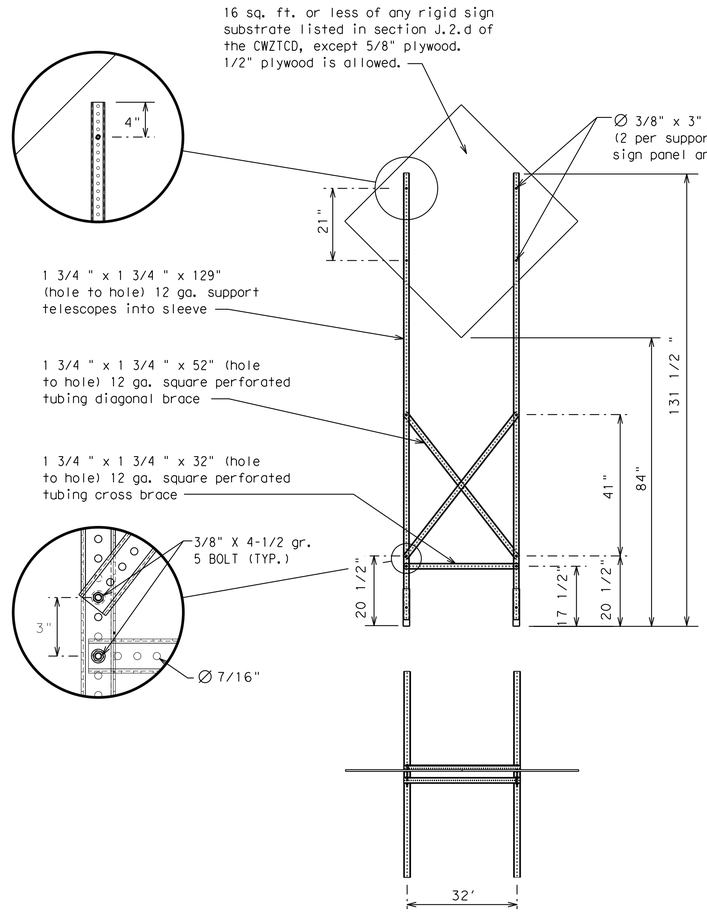

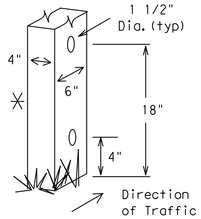

Nominal Post Size	Number of Posts	Maximum Sq. feet of Sign Face	Minimum Soil Embedment	Drilled Hole(s) Required
4 x 4	1	12	36"	NO
4 x 4	2	21	36"	NO
4 x 6	1	21	36"	YES
4 x 6	2	36	36"	YES

WOOD POST SYSTEM FOR GROUND MOUNTED SIGN SUPPORTS

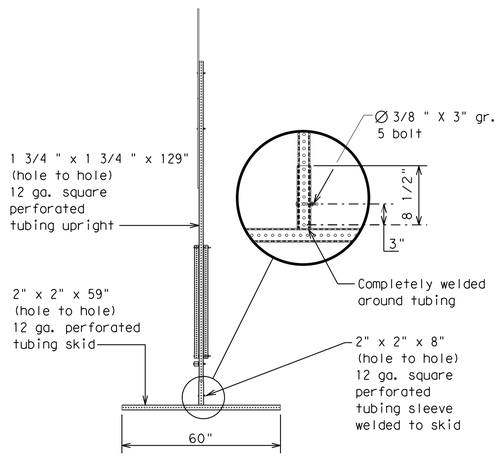

WEDGE ANCHORS

Both steel and plastic Wedge Anchor Systems as shown on the SMD Standard Sheets may be used as temporary sign supports for signs up to 10 square feet of sign face. They may be set in concrete or in sturdy soils if approved by the Engineer. (See web address for "Traffic Engineering Standard Sheets" on BC(1)).

OTHER DESIGNS

MORE DETAILS OF APPROVED LONG/INTERMEDIATE AND SHORT TERM SUPPORTS CAN BE FOUND ON THE CWZTCD LIST. SEE BC(1) FOR WEBSITE LOCATION.

GENERAL NOTES

1. Nails may be used in the assembly of wooden sign supports, but 3/8" bolts with nuts or 3/8" x 3 1/2" lag screws must be used on every joint for final connection.
2. No more than 2 sign posts shall be placed within a 7 ft. circle, except for specific materials noted on the CWZTCD List.
3. When project is completed, all sign supports and foundations shall be removed from the project site. This will be considered subsidiary to Item 502.

□ See BC(4) for definition of "Work Duration."

✳ Wood sign posts MUST be one piece. Splicing will NOT be allowed. Posts shall be painted white.

△ See the CWZTCD for the type of sign substrate that can be used for each approved sign support.

Texas Department of Transportation

Traffic Operations Division Standard

SKID MOUNTED PERFORATED SQUARE STEEL TUBING SIGN SUPPORTS

BARRICADE AND CONSTRUCTION TYPICAL SIGN SUPPORT

BC(5)-14

FILE: bc-14.dgn	DN: TxDOT	CK: TxDOT	DW: TxDOT	CK: TxDOT
©TxDOT November 2002	CONT	SECT	JOB	HIGHWAY
REVISIONS				
9-07 8-14	DIST	COUNTY		SHEET NO.
7-13				

DATE:
FILE:

DISCLAIMER:
The use of this standard is governed by the "Texas Engineering Practice Act". No warranty of any kind is made by TxDOT for any purpose whatsoever. TxDOT assumes no responsibility for the conversion of this standard to other formats or for incorrect results or damages resulting from its use.

DATE:
FILE:

WHEN NOT IN USE, REMOVE THE PCMS FROM THE RIGHT-OF-WAY OR PLACE THE PCMS BEHIND BARRIER OR GUARDRAIL WITH SIGN PANEL TURNED PARALLEL TO TRAFFIC

PORTABLE CHANGEABLE MESSAGE SIGNS

1. The Engineer/Inspector shall approve all messages used on portable changeable message signs (PCMS).
2. Messages on PCMS should contain no more than 8 words (about four to eight characters per word), not including simple words such as "TO," "FOR," "AT," etc.
3. Messages should consist of a single phase, or two phases that alternate. Three-phase messages are not allowed. Each phase of the message should convey a single thought, and must be understood by itself.
4. Use the word "EXIT" to refer to an exit ramp on a freeway; i.e., "EXIT CLOSED." Do not use the term "RAMP."
5. Always use the route or interstate designation (IH, US, SH, FM) along with the number when referring to a roadway.
6. When in use the bottom of a stationary PCMS message panel should be a minimum 7 feet above the roadway, where possible.
7. The message term "WEEKEND" should be used only if the work is to start on Saturday morning and end by Sunday evening at midnight. Actual days and hours of work should be displayed on the PCMS if work is to begin on Friday evening and/or continue into Monday morning.
8. The Engineer/Inspector may select one of two options which are available for displaying a two-phase message on a PCMS. Each phase may be displayed for either four seconds each or for three seconds each.
9. Do not "flash" messages or words included in a message. The message should be steady burn or continuous while displayed.
10. Do not present redundant information on a two-phase message; i.e., keeping two lines of the message the same and changing the third line.
11. Do not use the word "Danger" in message.
12. Do not display the message "LANES SHIFT LEFT" or "LANES SHIFT RIGHT" on a PCMS. Drivers do not understand the message.
13. Do not display messages that scroll horizontally or vertically across the face of the sign.
14. The following table lists abbreviated words and two-word phrases that are acceptable for use on a PCMS. Both words in a phrase must be displayed together. Words or phrases not on this list should not be abbreviated, unless shown in the TMUTCD.
15. PCMS character height should be at least 18 inches for trailer mounted units. They should be visible from at least 1/2 (.5) mile and the text should be legible from at least 600 feet at night and 800 feet in daylight. Truck mounted units must have a character height of 10 inches and must be legible from at least 400 feet.
16. Each line of text should be centered on the message board rather than left or right justified.
17. If disabled, the PCMS should default to an illegible display that will not alarm motorists and will only be used to alert workers that the PCMS has malfunctioned. A pattern such as a series of horizontal solid bars is appropriate.

WORD OR PHRASE	ABBREVIATION
Access Road	ACCS RD
Alternate	ALT
Avenue	AVE
Best Route	BEST RTE
Boulevard	BLVD
Bridge	BRDG
Cannot	CANT
Center	CTR
Construction Ahead	CONST AHD
CROSSING	XING
Detour Route	DETOUR RTE
Do Not	DONT
East	E
Eastbound	(route) E
Emergency	EMER
Emergency Vehicle	EMER VEH
Entrance, Enter	ENT
Express Lane	EXP LN
Expressway	EXPWY
XXXX Feet	XXXX FT
Fog Ahead	FOG AHD
Freeway	FRWY, FWY
Freeway Blocked	FWY BLKD
Friday	FRI
Hazardous Driving	HAZ DRIVING
Hazardous Material	HAZMAT
High-Occupancy	HOV
Vehicle Highway	HWY
Hour(s)	HR, HRS
Information	INFO
It Is	ITS
Junction	JCT
Left	LFT
Left Lane	LFT LN
Lane Closed	LN CLOSED
Lower Level	LWR LEVEL
Maintenance	MAINT
Major	MAJ
Miles	MI
Miles Per Hour	MPH
Minor	MNR
Monday	MON
Normal	NORM
North	N
Northbound	(route) N
Parking	PKING
Road	RD
Right Lane	RT LN
Saturday	SAT
Service Road	SERV RD
Shoulder	SHLDR
Slippery	SLIP
South	S
Southbound	(route) S
Speed	SPD
Street	ST
Sunday	SUN
Telephone	PHONE
Temporary	TEMP
Thursday	THURS
To Downtown	TO DWNTN
Traffic	TRAF
Travelers	TRVLRS
Tuesday	TUES
Time Minutes	TIME MIN
Upper Level	UPR LEVEL
Vehicles (s)	VEH, VEHS
Warning	WARN
Wednesday	WED
Weight Limit	WT LIMIT
West	W
Westbound	(route) W
Wet Pavement	WET PVMT
Will Not	WONT

Roadway designation # IH-number, US-number, SH-number, FM-number

RECOMMENDED PHASES AND FORMATS FOR PCMS MESSAGES DURING ROADWORK ACTIVITIES

(The Engineer may approve other messages not specifically covered here.)

Phase 1: Condition Lists

Road/Lane/Ramp Closure List

- FREEWAY CLOSED X MILE
- FRONTAGE ROAD CLOSED
- ROAD CLOSED AT SH XXX
- SHOULDER CLOSED XXX FT
- ROAD CLSD AT FM XXXX
- RIGHT LN CLOSED XXX FT
- RIGHT X LANES CLOSED
- RIGHT X LANES OPEN
- CENTER LANE CLOSED
- DAYTIME LANE CLOSURES
- NIGHT LANE CLOSURES
- I-XX SOUTH EXIT CLOSED
- VARIOUS LANES CLOSED
- EXIT XXX CLOSED X MILE
- EXIT CLOSED
- RIGHT LN TO BE CLOSED
- MALL DRIVEWAY CLOSED
- X LANES CLOSED TUE - FRI
- XXXXXXXX BLVD CLOSED

Other Condition List

- ROADWORK XXX FT
- ROAD REPAIRS XXXX FT
- FLAGGER XXXX FT
- LANE NARROWS XXXX FT
- RIGHT LN NARROWS XXXX FT
- TWO-WAY TRAFFIC XX MILE
- MERGING TRAFFIC XXXX FT
- CONST TRAFFIC XXX FT
- LOOSE GRAVEL XXXX FT
- UNEVEN LANES XXXX FT
- DETOUR X MILE
- ROUGH ROAD XXXX FT
- ROADWORK PAST SH XXXX
- ROADWORK NEXT FRI-SUN
- BUMP XXXX FT
- US XXX EXIT X MILES
- TRAFFIC SIGNAL XXXX FT
- LANES SHIFT *

* LANES SHIFT in Phase 1 must be used with STAY IN LANE in Phase 2.

Phase 2: Possible Component Lists

Action to Take/Effect on Travel List

- MERGE RIGHT
- FORM X LINES RIGHT
- DETOUR NEXT X EXITS
- USE XXXXX RD EXIT
- USE EXIT XXX
- USE EXIT I-XX NORTH
- STAY ON US XXX SOUTH
- USE I-XX E TO I-XX N
- TRUCKS USE US XXX N
- WATCH FOR TRUCKS
- WATCH FOR TRUCKS
- EXPECT DELAYS
- EXPECT DELAYS
- PREPARE TO STOP
- REDUCE SPEED XXX FT
- END SHOULDER USE
- USE OTHER ROUTES
- WATCH FOR WORKERS
- STAY IN LANE *

Location List

- AT FM XXXX
- BEFORE RAILROAD CROSSING
- NEXT X MILES
- PAST US XXX EXIT
- XXXXXXX TO XXXXXXX
- US XXX TO FM XXXX

Warning List

- SPEED LIMIT XX MPH
- MAXIMUM SPEED XX MPH
- MINIMUM SPEED XX MPH
- ADVISORY SPEED XX MPH
- RIGHT LANE EXIT
- USE CAUTION
- DRIVE SAFELY
- DRIVE WITH CARE

** Advance Notice List

- TUE-FRI XX AM- X PM
- APR XX-XX X PM-X AM
- BEGINS MONDAY
- BEGINS MAY XX
- MAY X-X XX PM - XX AM
- NEXT FRI-SUN
- XX AM TO XX PM
- NEXT TUE AUG XX
- TONIGHT XX PM- XX AM

* LANES SHIFT in Phase 1 must be used with STAY IN LANE in Phase 2.

** See Application Guidelines Note 6.

APPLICATION GUIDELINES

1. Only 1 or 2 phases are to be used on a PCMS.
2. The 1st phase (or both) should be selected from the "Road/Lane/Ramp Closure List" and the "Other Condition List".
3. A 2nd phase can be selected from the "Action to Take/Effect on Travel, Location, General Warning, or Advance Notice Phase Lists".
4. A Location Phase is necessary only if a distance or location is not included in the first phase selected.
5. If two PCMS are used in sequence, they must be separated by a minimum of 1000 ft. Each PCMS shall be limited to two phases, and should be understandable by themselves.
6. For advance notice, when the current date is within seven days of the actual work date, calendar days should be replaced with days of the week. Advance notification should typically be for no more than one week prior to the work.

WORDING ALTERNATIVES

1. The words RIGHT, LEFT and ALL can be interchanged as appropriate.
2. Roadway designations IH, US, SH, FM and LP can be interchanged as appropriate.
3. EAST, WEST, NORTH and SOUTH (or abbreviations E, W, N and S) can be interchanged as appropriate.
4. Highway names and numbers replaced as appropriate.
5. ROAD, HIGHWAY and FREEWAY can be interchanged as needed.
6. AHEAD may be used instead of distances if necessary.
7. FT and MI, MILE and MILES interchanged as appropriate.
8. AT, BEFORE and PAST interchanged as needed.
9. Distances or AHEAD can be eliminated from the message if a location phase is used.

PCMS SIGNS WITHIN THE R.O.W. SHALL BE BEHIND GUARDRAIL OR CONCRETE BARRIER OR SHALL HAVE A MINIMUM OF FOUR (4) PLASTIC DRUMS PLACED PERPENDICULAR TO TRAFFIC ON THE UPSTREAM SIDE OF THE PCMS, WHEN EXPOSED TO ONE DIRECTION OF TRAFFIC. WHEN EXPOSED TO TWO WAY TRAFFIC, THE FOUR DRUMS SHOULD BE PLACED WITH ONE DRUM AT EACH OF THE FOUR CORNERS OF THE UNIT.

FULL MATRIX PCMS SIGNS

1. When Full Matrix PCMS signs are used, the character height and legibility/visibility requirements shall be maintained as listed in Note 15 under "PORTABLE CHANGEABLE MESSAGE SIGNS" above.
2. When symbol signs, such as the "Flagger Symbol"(CW20-7) are represented graphically on the Full Matrix PCMS sign and, with the approval of the Engineer, it shall maintain the legibility/visibility requirement listed above.
3. When symbol signs are represented graphically on the Full Matrix PCMS, they shall only supplement the use of the static sign represented, and shall not substitute for, or replace that sign.
4. A full matrix PCMS may be used to simulate a flashing arrow board provided it meets the visibility, flash rate and dimming requirements on BC(7), for the same size arrow.

Texas Department of Transportation

Traffic Operations Division Standard

BARRICADE AND CONSTRUCTION PORTABLE CHANGEABLE MESSAGE SIGN (PCMS)

BC(6)-14

FILE: bc-14.dgn	DN: TxDOT	CK: TxDOT	DW: TxDOT	CK: TxDOT
©TxDOT November 2002	CONT	SECT	JOB	HIGHWAY
REVISIONS				
9-07 8-14	DIST	COUNTY		SHEET NO.
7-13				

DISCLAIMER:
The use of this standard is governed by the "Texas Engineering Practice Act". No warranty of any kind is made by TxDOT for any purpose whatsoever. TxDOT assumes no responsibility for the conversion of this standard to other formats or for incorrect results or damages resulting from its use.

DATE:
FILE:

1. Barrier Reflectors shall be pre-qualified, and conform to the color and reflectivity requirements of DMS-8600. A list of prequalified Barrier Reflectors can be found at the Material Producer List web address shown on BC(1).
2. Color of Barrier Reflectors shall be as specified in the TMUTCD. The cost of the reflectors shall be considered subsidiary to Item 512.

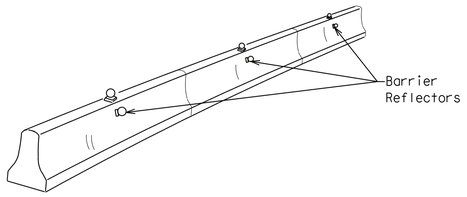

CONCRETE TRAFFIC BARRIER (CTB)

3. Where traffic is on one side of the CTB, two (2) Barrier Reflectors shall be mounted in approximately the midsection of each section of CTB. An alternate mounting location is uniformly spaced at one end of each CTB. This will allow for attachment of a barrier grapple without damaging the reflector. The Barrier Reflector mounted on the side of the CTB shall be located directly below the reflector mounted on top of the barrier, as shown in the detail above.
4. Where CTB separates two-way traffic, three barrier reflectors shall be mounted on each section of CTB. The reflector unit on top shall have two yellow reflective faces (Bi-Directional)while the reflectors on each side of the barrier shall have one yellow reflective face, as shown in the detail above.
5. When CTB separates traffic traveling in the same direction, no barrier reflectors will be required on top of the CTB.
6. Barrier Reflector units shall be yellow or white in color to match the edgeline being supplemented.
7. Maximum spacing of Barrier Reflectors is forty (40) feet.
8. Pavement markers or temporary flexible-reflective roadway marker tabs shall NOT be used as CTB delineation.
9. Attachment of Barrier Reflectors to CTB shall be per manufacturer's recommendations.
10. Missing or damaged Barrier Reflectors shall be replaced as directed by the Engineer.
11. Single slope barriers shall be delineated as shown on the above detail.

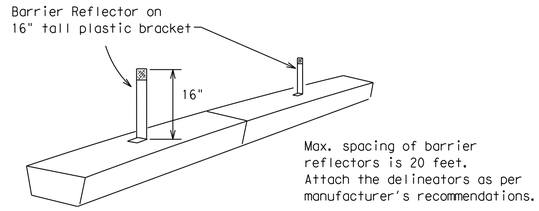

LOW PROFILE CONCRETE BARRIER (LPCB)

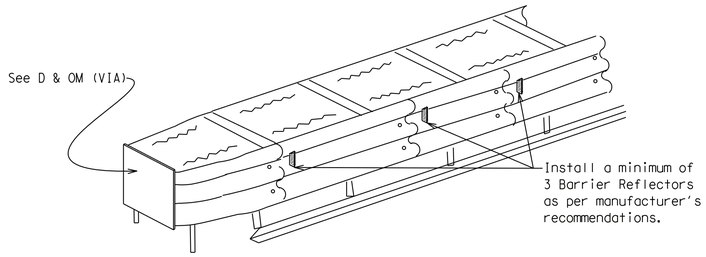

DELINEATION OF END TREATMENTS

END TREATMENTS FOR CTB'S USED IN WORK ZONES

End treatments used on CTB's in work zones shall meet crashworthy standards as defined in the National Cooperative Highway Research Report 350. Refer to the CWZTCD List for approved end treatments and manufacturers.

BARRIER REFLECTORS FOR CONCRETE TRAFFIC BARRIER AND ATTENUATORS

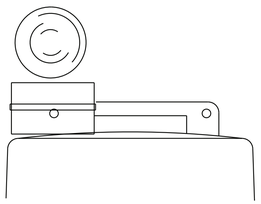

Type C Warning Light or approved substitute mounted on a drum adjacent to the travel way.

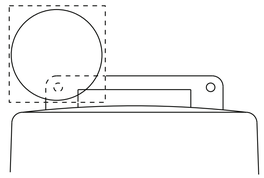

Warning reflector may be round or square.Must have a yellow reflective surface area of at least 30 square inches

WARNING LIGHTS

1. Warning lights shall meet the requirements of the TMUTCD.
2. Warning lights shall NOT be installed on barricades.
3. Type A-Low Intensity Flashing Warning Lights are commonly used with drums. They are intended to warn of or mark a potentially hazardous area. Their use shall be as indicated on this sheet and/or other sheets of the plans by the designation "FL". The Type A Warning Lights shall not be used with signs manufactured with Type B_{FL} or C_{FL} Sheeting meeting the requirements of Departmental Material Specification DMS-8300.
4. Type-C and Type D 360 degree Steady Burn Lights are intended to be used in a series for delineation to supplement other traffic control devices. Their use shall be as indicated on this sheet and/or other sheets of the plans by the designation "SB".
5. The Engineer/Inspector or the plans shall specify the location and type of warning lights to be installed on the traffic control devices.
6. When required by the Engineer, the Contractor shall furnish a copy of the warning lights certification. The warning light manufacturer will certify the warning lights meet the requirements of the latest ITE Purchase Specifications for Flashing and Steady-Burn Warning Lights.
7. When used to delineate curves, Type-C and Type D Steady Burn Lights should only be placed on the outside of the curve, not the inside.
8. The location of warning lights and warning reflectors on drums shall be as shown elsewhere in the plans.

WARNING LIGHTS MOUNTED ON PLASTIC DRUMS

1. Type A flashing warning lights are intended to warn drivers that they are approaching or are in a potentially hazardous area.
2. Type A random flashing warning lights are not intended for delineation and shall not be used in a series.
3. A series of sequential flashing warning lights placed on channelizing devices to form a merging taper may be used for delineation. If used, the successive flashing of the sequential warning lights should occur from the beginning of the taper to the end of the merging taper in order to identify the desired vehicle path. The rate of flashing for each light shall be 65 flashes per minute, plus or minus 10 flashes.
4. Type C and D steady-burn warning lights are intended to be used in a series to delineate the edge of the travel lane on detours, on lane changes, on lane closures, and on other similar conditions.
5. Type A, Type C and Type D warning lights shall be installed at locations as detailed on other sheets in the plans.
6. Warning lights shall not be installed on a drum that has a sign, chevron or vertical panel.
7. The maximum spacing for warning lights on drums should be identical to the channelizing device spacing.

WARNING REFLECTORS MOUNTED ON PLASTIC DRUMS AS A SUBSTITUTE FOR TYPE C (STEADY BURN) WARNING LIGHTS

1. A warning reflector or approved substitute may be mounted on a plastic drum as a substitute for a Type C, steady burn warning light at the discretion of the Contractor unless otherwise noted in the plans.
2. The warning reflector shall be yellow in color and shall be manufactured using a sign substrate approved for use with plastic drums listed on the CWZTCD.
3. The warning reflector shall have a minimum retroreflective surface area (one-side) of 30 square inches.
4. Round reflectors shall be fully reflectorized, including the area where attached to the drum.
5. Square substrates must have a minimum of 30 square inches of reflectorized sheeting. They do not have to be reflectorized where it attaches to the drum.
6. The side of the warning reflector facing approaching traffic shall have sheeting meeting the color and retroreflectivity requirements for DMS 8300-Type B or Type C.
7. When used near two-way traffic, both sides of the warning reflector shall be reflectorized.
8. The warning reflector should be mounted on the side of the handle nearest approaching traffic.
9. The maximum spacing for warning reflectors should be identical to the channelizing device spacing requirements.

Arrow Boards may be located behind channelizing devices in place for a shoulder taper or merging taper, otherwise they shall be delineated with four (4) channelizing devices placed perpendicular to traffic on the upstream side of traffic.

1. The Flashing Arrow Board should be used for all lane closures on multi-lane roadways, or slow moving maintenance or construction activities on the travel lanes.
2. Flashing Arrow Boards should not be used on two-lane, two-way roadways, detours, diversions or work on shoulders unless the "CAUTION" display (see detail below) is used.
3. The Engineer/Inspector shall choose all appropriate signs, barricades and/or other traffic control devices that should be used in conjunction with the Flashing Arrow Board.
4. The Flashing Arrow Board should be able to display the following symbols:

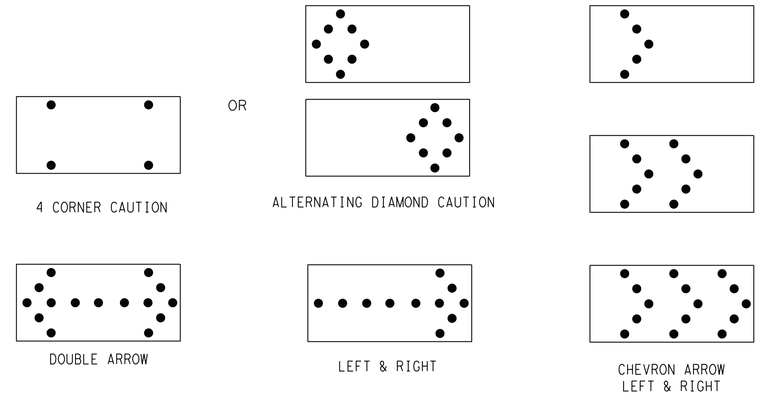

5. The "CAUTION" display consists of four corner lamps flashing simultaneously, or the Alternating Diamond Caution mode as shown.
6. The straight line caution display is NOT ALLOWED.
7. The Flashing Arrow Board shall be capable of minimum 50 percent dimming from rated lamp voltage. The flashing rate of the lamps shall not be less than 25 nor more than 40 flashes per minute.
8. Minimum lamp "on time" shall be approximately 50 percent for the flashing arrow and equal intervals of 25 percent for each sequential phase of the flashing chevron.
9. The sequential arrow display is NOT ALLOWED.
10. The flashing arrow display is the TxDOT standard; however, the sequential Chevron display may be used during daylight operations.
11. The Flashing Arrow Board shall be mounted on a vehicle, trailer or other suitable support.
12. A Flashing Arrow Board SHALL NOT BE USED to laterally shift traffic.
13. A full matrix PCMS may be used to simulate a Flashing Arrow Board provided it meets visibility, flash rate and dimming requirements on this sheet for the same size arrow.
14. Minimum mounting height of trailer mounted Arrow Boards should be 7 feet from roadway to bottom of panel.

REQUIREMENTS			
TYPE	MINIMUM SIZE	MINIMUM NUMBER OF PANEL LAMPS	MINIMUM VISIBILITY DISTANCE
B	30 x 60	13	3/4 mile
C	48 x 96	15	1 mile

ATTENTION

Flashing Arrow Boards shall be equipped with automatic dimming devices.

WHEN NOT IN USE, REMOVE THE ARROW BOARD FROM THE RIGHT-OF-WAY OR PLACE THE ARROW BOARD BEHIND CONCRETE TRAFFIC BARRIER OR GUARDRAIL.

FLASHING ARROW BOARDS

TRUCK-MOUNTED ATTENUATORS

1. Truck-mounted attenuators (TMA) used on TxDOT facilities must meet the requirements outlined in the National Cooperative Highway Research Report No. 350 (NCHRP 350) or the Manual for Assessing Safety Hardware (MASH).
2. Refer to the CWZTCD for the requirements of Level 2 or Level 3 TMAs.
3. Refer to the CWZTCD for a list of approved TMAs.
4. TMAs are required on freeways unless otherwise noted in the plans.
5. A TMA should be used anytime that it can be positioned 30 to 100 feet in advance of the area of crew exposure without adversely affecting the work performance.
6. The only reason a TMA should not be required is when a work area is spread down the roadway and the work crew is an extended distance from the TMA.

Texas Department of Transportation

Traffic Operations Division Standard

BARRICADE AND CONSTRUCTION ARROW PANEL, REFLECTORS, WARNING LIGHTS & ATTENUATOR

BC(7)-14

FILE: bc-14.dgn	DN: TxDOT	CK: TxDOT	DW: TxDOT	CK: TxDOT
©TxDOT November 2002	CONT	SECT	JOB	HIGHWAY
REVISIONS 9-07 8-14 7-13	DIST	COUNTY		SHEET NO.

DISCLAIMER:
The use of this standard is governed by the "Texas Engineering Practice Act". No warranty of any kind is made by TxDOT for any purpose whatsoever. TxDOT assumes no responsibility for the conversion of this standard to other formats or for incorrect results or damages resulting from its use.

DATE:
FILE:

GENERAL NOTES

1. For long term stationary work zones on freeways, drums shall be used as the primary channelizing device.
2. For intermediate term stationary work zones on freeways, drums should be used as the primary channelizing device but may be replaced in tangent sections by vertical panels, or 42" two-piece cones. In tangent sections one-piece cones may be used with the approval of the Engineer but only if personnel are present on the project at all times to maintain the cones in proper position and location.
3. For short term stationary work zones on freeways, drums are the preferred channelizing device but may be replaced in tapers, transitions and tangent sections by vertical panels, two-piece cones or one-piece cones as approved by the Engineer.
4. Drums and all related items shall comply with the requirements of the current version of the "Texas Manual on Uniform Traffic Control Devices" (TMUTCD) and the "Compliant Work Zone Traffic Control Devices List" (CWZTCD).
5. Drums, bases, and related materials shall exhibit good workmanship and shall be free from objectionable marks or defects that would adversely affect their appearance or serviceability.
6. The Contractor shall have a maximum of 24 hours to replace any plastic drums identified for replacement by the Engineer/Inspector. The replacement device must be an approved device.

GENERAL DESIGN REQUIREMENTS

Pre-qualified plastic drums shall meet the following requirements:

1. Plastic drums shall be a two-piece design; the "body" of the drum shall be the top portion and the "base" shall be the bottom.
2. The body and base shall lock together in such a manner that the body separates from the base when impacted by a vehicle traveling at a speed of 20 MPH or greater but prevents accidental separation due to normal handling and/or air turbulence created by passing vehicles.
3. Plastic drums shall be constructed of lightweight flexible, and deformable materials. The Contractor shall NOT use metal drums or single piece plastic drums as channelization devices or sign supports.
4. Drums shall present a profile that is a minimum of 18 inches in width at the 36 inch height when viewed from any direction. The height of drum unit (body installed on base) shall be a minimum of 36 inches and a maximum of 42 inches.
5. The top of the drum shall have a built-in handle for easy pickup and shall be designed to drain water and not collect debris. The handle shall have a minimum of two widely spaced 9/16 inch diameter holes to allow attachment of a warning light, warning reflector unit or approved compliant sign.
6. The exterior of the drum body shall have a minimum of four alternating orange and white retroreflective circumferential stripes not less than 4 inches nor greater than 8 inches in width. Any non-reflectorized space between any two adjacent stripes shall not exceed 2 inches in width.
7. Bases shall have a maximum width of 36 inches, a maximum height of 4 inches, and a minimum of two footholds of sufficient size to allow base to be held down while separating the drum body from the base.
8. Plastic drums shall be constructed of ultra-violet stabilized, orange, high-density polyethylene (HDPE) or other approved material.
9. Drum body shall have a maximum unballasted weight of 11 lbs.
10. Drum and base shall be marked with manufacturer's name and model number.

RETROREFLECTIVE SHEETING

1. The stripes used on drums shall be constructed of sheeting meeting the color and retroreflectivity requirements of Departmental Materials Specification DMS-8300, "Sign Face Materials." Type A reflective sheeting shall be supplied unless otherwise specified in the plans.
2. The sheeting shall be suitable for use on and shall adhere to the drum surface such that, upon vehicular impact, the sheeting shall remain adhered in-place and exhibit no delaminating, cracking, or loss of retroreflectivity other than that loss due to abrasion of the sheeting surface.

BALLAST

1. Unballasted bases shall be large enough to hold up to 50 lbs. of sand. This base, when filled with the ballast material, should weigh between 35 lbs (minimum) and 50 lbs (maximum). The ballast may be sand in one to three sandbags separate from the base, sand in a sand-filled plastic base, or other ballasting devices as approved by the Engineer. Stacking of sandbags will be allowed, however height of sandbags above pavement surface may not exceed 12 inches.
2. Bases with built-in ballast shall weigh between 40 lbs. and 50 lbs. Built-in ballast can be constructed of an integral crumb rubber base or a solid rubber base.
3. Recycled truck tire sidewalls may be used for ballast on drums approved for this type of ballast on the CWZTCD list.
4. The ballast shall not be heavy objects, water, or any material that would become hazardous to motorists, pedestrians, or workers when the drum is struck by a vehicle.
5. When used in regions susceptible to freezing, drums shall have drainage holes in the bottoms so that water will not collect and freeze becoming a hazard when struck by a vehicle.
6. Ballast shall not be placed on top of drums.
7. Adhesives may be used to secure base of drums to pavement.

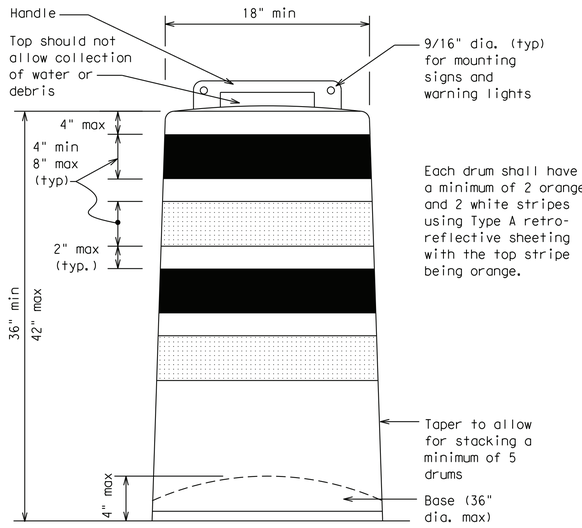

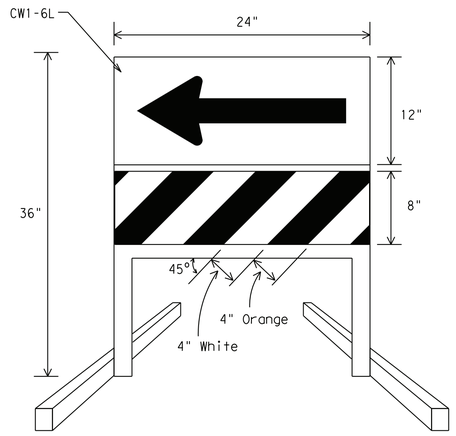

DIRECTION INDICATOR BARRICADE

1. The Direction Indicator Barricade may be used in tapers, transitions, and other areas where specific directional guidance to drivers is necessary.
2. If used, the Direction Indicator Barricade should be used in series to direct the driver through the transition and into the intended travel lane.
3. The Direction Indicator Barricade shall consist of One-Direction Large Arrow (CW1-6) sign in the size shown with a black arrow on a background of Type B_{FL} or Type C_{FL} Orange retroreflective sheeting above a rail with Type A retroreflective sheeting in alternating 4" white and orange stripes sloping downward at an angle of 45 degrees in the direction road users are to pass. Sheeting types shall be as per DMS 8300.
4. Double arrows on the Direction Indicator Barricade will not be allowed.
5. Approved manufacturers are shown on the CWZTCD List. Ballast shall be as approved by the manufacturers instructions.

This detail is not intended for fabrication. See note 3 and the CWZTCD list for providers of approved Detectable Pedestrian Barricades

DETECTABLE PEDESTRIAN BARRICADES

1. When existing pedestrian facilities are disrupted, closed, or relocated in a TTC zone, the temporary facilities shall be detectable and include accessibility features consistent with the features present in the existing pedestrian facility.
2. Where pedestrians with visual disabilities normally use the closed sidewalk, a device that is detectable by a person with a visual disability traveling with the aid of a long cane shall be placed across the full width of the closed sidewalk.
3. Detectable pedestrian barricades similar to the one pictured above, longitudinal channelizing devices, some concrete barriers, and wood or chain link fencing with a continuous detectable edging can satisfactorily delineate a pedestrian path.
4. Tape, rope, or plastic chain strung between devices are not detectable, do not comply with the design standards in the "Americans with Disabilities Act Accessibility Guidelines for Buildings and Facilities (ADAAG)" and should not be used as a control for pedestrian movements.
5. Warning lights shall not be attached to detectable pedestrian barricades.
6. Detectable pedestrian barricades may use 8" nominal barricade rails as shown on BC(10) provided that the top rail provides a smooth continuous rail suitable for hand trailing with no splinters, burrs, or sharp edges.

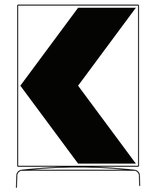

18" x 24" Sign
(Maximum Sign Dimension)
Chevron CW1-8, Opposing Traffic Lane Divider, Driveway sign D70a, Keep Right R4 series or other signs as approved by Engineer

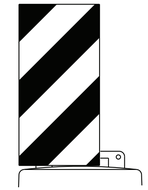

12" x 24"
Vertical Panel
mount with diagonals sloping down towards travel way

Plywood, Aluminum or Metal sign substrates shall NOT be used on plastic drums

SIGNS, CHEVRONS, AND VERTICAL PANELS MOUNTED ON PLASTIC DRUMS

1. Signs used on plastic drums shall be manufactured using substrates listed on the CWZTCD.
2. Chevrons and other work zone signs with an orange background shall be manufactured with Type B_{FL} or Type C_{FL} Orange sheeting meeting the color and retroreflectivity requirements of DMS-8300, "Sign Face Material," unless otherwise specified in the plans.
3. Vertical Panels shall be manufactured with orange and white sheeting meeting the requirements of DMS-8300 Type A Diagonal stripes on Vertical Panels shall slope down toward the intended traveled lane.
4. Other sign messages (text or symbolic) may be used as approved by the Engineer. Sign dimensions shall not exceed 18 inches in width or 24 inches in height, except for the R9 series signs discussed in note 8 below.
5. Signs shall be installed using a 1/2 inch bolt (nominal) and nut, two washers, and one locking washer for each connection.
6. Mounting bolts and nuts shall be fully engaged and adequately torqued. Bolts should not extend more than 1/2 inch beyond nuts.
7. Chevrons may be placed on drums on the outside of curves, on merging tapers or on shifting tapers. When used in these locations they may be placed on every drum or spaced not more than on every third drum. A minimum of three (3) should be used at each location called for in the plans.
8. R9-9, R9-10, R9-11 and R9-11a Sidewalk Closed signs which are 24 inches wide may be mounted on plastic drums, with approval of the Engineer.

Texas Department of Transportation

Traffic Operations Division Standard

BARRICADE AND CONSTRUCTION CHANNELIZING DEVICES

BC(8)-14

FILE: bc-14.dgn	DN: TxDOT	CK: TxDOT	DW: TxDOT	CK: TxDOT
©TxDOT November 2002	CONT	SECT	JOB	HIGHWAY
REVISIONS				
4-03 7-13	DIST	COUNTY		SHEET NO.
9-07 8-14				

DISCLAIMER:
The use of this standard is governed by the "Texas Engineering Practice Act". No warranty of any kind is made by TxDOT for any purpose whatsoever. TxDOT assumes no responsibility for the conversion of this standard to other formats or for incorrect results or damages resulting from its use.

DATE:
FILE:

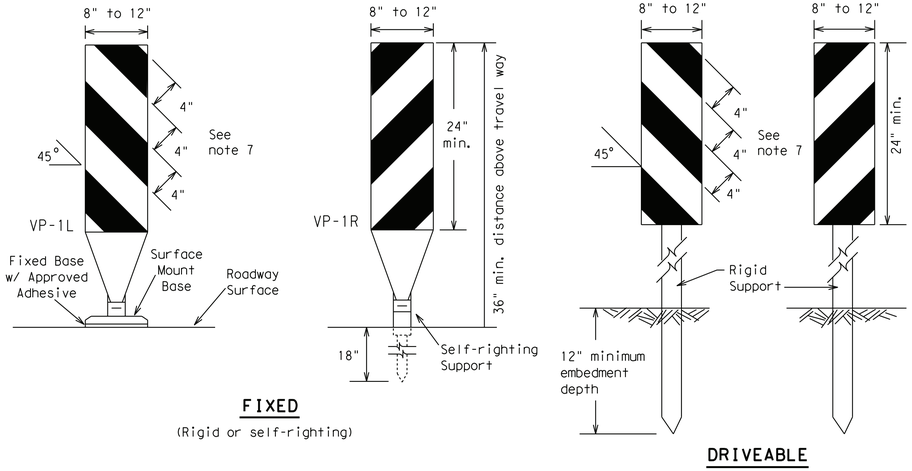

FIXED
(Rigid or self-righting)

DRIVEABLE

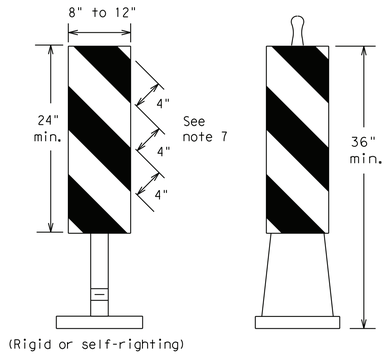

(Rigid or self-righting)

PORTABLE

1. Vertical Panels (VP's) are normally used to channelize traffic or divide opposing lanes of traffic.
2. VP's may be used in daytime or nighttime situations. They may be used at the edge of shoulder drop-offs and other areas such as lane transitions where positive daytime and nighttime delineation is required. The Engineer/Inspector shall refer to the Roadway Design Manual Appendix B "Treatment of Pavement Drop-offs in Work Zones" for additional guidelines on the use of VP's for drop-offs.
3. VP's should be mounted back to back if used at the edge of cuts adjacent to two-way two lane roadways. Stripes are to be reflective orange and reflective white and should always slope downward toward the travel lane.
4. VP's used on expressways and freeways or other high speed roadways, may have more than 270 square inches of retroreflective area facing traffic.
5. Self-righting supports are available with portable base. See "Compliant Work Zone Traffic Control Devices List" (CWZTCD).
6. Sheeting for the VP's shall be retroreflective Type A conforming to Departmental Material Specification DMS-8300, unless noted otherwise.
7. Where the height of reflective material on the vertical panel is 36 inches or greater, a panel stripe of 6 inches shall be used.

VERTICAL PANELS (VPs)

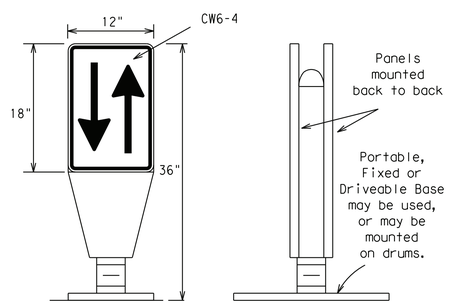

1. Opposing Traffic Lane Dividers (OTLD) are delineation devices designed to convert a normal one-way roadway section to two-way operation. OTLD's are used on temporary centerlines. The upward and downward arrows on the sign's face indicate the direction of traffic on either side of the divider. The base is secured to the pavement with an adhesive or rubber weight to minimize movement caused by a vehicle impact or wind gust.
2. The OTLD may be used in combination with 42" cones or VPs.
3. Spacing between the OTLD shall not exceed 500 feet. 42" cones or VPs placed between the OTLD's should not exceed 100 foot spacing.
4. The OTLD shall be orange with a black non-reflective legend. Sheeting for the OTLD shall be retroreflective Type B_{FL} or Type C_{FL} conforming to Departmental Material Specification DMS-8300, unless noted otherwise. The legend shall meet the requirements of DMS-8300.

OPPOSING TRAFFIC LANE DIVIDERS (OTLD)

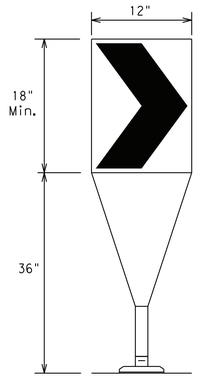

Fixed Base w/ Approved Adhesive (Driveable Base, or Flexible Support can be used)

1. The chevron shall be a vertical rectangle with a minimum size of 12 by 18 inches.
2. Chevrons are intended to give notice of a sharp change of alignment with the direction of travel and provide additional emphasis and guidance for vehicle operators with regard to changes in horizontal alignment of the roadway.
3. Chevrons, when used, shall be erected on the outside of a sharp curve or turn, or on the far side of an intersection. They shall be in line with and at right angles to approaching traffic. Spacing should be such that the motorist always has three in view, until the change in alignment eliminates its need.
4. To be effective, the chevron should be visible for at least 500 feet.
5. Chevrons shall be orange with a black nonreflective legend. Sheeting for the chevron shall be retroreflective Type B_{FL} or Type C_{FL} conforming to Departmental Material Specification DMS-8300, unless noted otherwise. The legend shall meet the requirements of DMS-8300.
6. For Long Term Stationary use on tapers or transitions on freeways and divided highways self-righting chevrons may be used to supplement plastic drums but not to replace plastic drums.

CHEVRONS

GENERAL NOTES

1. Work Zone channelizing devices illustrated on this sheet may be installed in close proximity to traffic and are suitable for use on high or low speed roadways. The Engineer/Inspector shall ensure that spacing and placement is uniform and in accordance with the "Texas Manual on Uniform Traffic Control Devices" (TMUTCD).
2. Channelizing devices shown on this sheet may have a driveable, fixed or portable base. The requirement for self-righting channelizing devices must be specified in the General Notes or other plan sheets.
3. Channelizing devices on self-righting supports should be used in work zone areas where channelizing devices are frequently impacted by errant vehicles or vehicle related wind gusts making alignment of the channelizing devices difficult to maintain. Locations of these devices shall be detailed elsewhere in the plans. These devices shall conform to the TMUTCD and the "Compliant Work Zone Traffic Control Devices List" (CWZTCD).
4. The Contractor shall maintain devices in a clean condition and replace damaged, nonreflective, faded, or broken devices and bases as required by the Engineer/Inspector. The Contractor shall be required to maintain proper device spacing and alignment.
5. Portable bases shall be fabricated from virgin and/or recycled rubber. The portable bases shall weigh a minimum of 30 lbs.
6. Pavement surfaces shall be prepared in a manner that ensures proper bonding between the adhesives, the fixed mount bases and the pavement surface. Adhesives shall be prepared and applied according to the manufacturer's recommendations.
7. The installation and removal of channelizing devices shall not cause detrimental effects to the final pavement surfaces, including pavement surface discoloration or surface integrity. Driveable bases shall not be permitted on final pavement surfaces. The Engineer/Inspector shall approve all application and removal procedures of fixed bases.

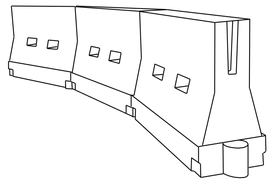

LONGITUDINAL CHANNELIZING DEVICES (LCD)

1. LCDs are crashworthy, lightweight, deformable devices that are highly visible, have good target value and can be connected together. They are not designed to contain or redirect a vehicle on impact.
2. LCDs may be used instead of a line of cones or drums.
3. LCDs shall be placed in accordance to application and installation requirements specific to the device, and used only when shown on the CWZTCD list.
4. LCDs should not be used to provide positive protection for obstacles, pedestrians or workers.
5. LCDs shall be supplemented with retroreflective delineation as required for temporary barriers on BC(7) when placed roughly parallel to the travel lanes.
6. LCDs used as barricades placed perpendicular to traffic should have at least one row of reflective sheeting meeting the requirements for barricade rails as shown on BC(10) placed near the top of the LCD along the full length of the device.

WATER BALLASTED SYSTEMS USED AS BARRIERS

1. Water ballasted systems used as barriers shall not be used solely to channelize road users, but also to protect the work space per the appropriate NCHRP 350 crashworthiness requirements based on roadway speed and barrier application.
2. Water ballasted systems used to channelize vehicular traffic shall be supplemented with retroreflective delineation or channelizing devices to improve daytime/nighttime visibility. They may also be supplemented with pavement markings.
3. Water ballasted systems used as barriers shall be placed in accordance to application and installation requirements specific to the device, and used only when shown on the CWZTCD list.
4. Water ballasted systems used as barriers should not be used for a merging taper except in low speed (less than 45 MPH) urban areas. When used on a taper in a low speed urban area, the taper shall be delineated and the taper length should be designed to optimize road user operations considering the available geometric conditions.
5. When water ballasted systems used as barriers have blunt ends exposed to traffic, they should be attenuated as per manufacturer recommendations or flared to a point outside the clear zone.

If used to channelize pedestrians, longitudinal channelizing devices or water ballasted systems must have a continuous detectable bottom for users of long canes and the top of the unit shall not be less than 32 inches in height.

HOLLOW OR WATER BALLASTED SYSTEMS USED AS LONGITUDINAL CHANNELIZING DEVICES OR BARRIERS

Posted Speed *	Formula	Minimum Desirable Taper Lengths * * 10' Offset	11' Offset	12' Offset	Suggested Maximum Spacing of Channelizing Devices On a Taper	On a Tangent
30	$L = \frac{WS^2}{60}$	150'	165'	180'	30'	60'
35		205'	225'	245'	35'	70'
40		265'	295'	320'	40'	80'
45	L = WS	450'	495'	540'	45'	90'
50		500'	550'	600'	50'	100'
55		550'	605'	660'	55'	110'
60		600'	660'	720'	60'	120'
65		650'	715'	780'	65'	130'
70		700'	770'	840'	70'	140'
75		750'	825'	900'	75'	150'
80		800'	880'	960'	80'	160'

* * Taper lengths have been rounded off.
L=Length of Taper (FT.) W=Width of Offset (FT.)
S=Posted Speed (MPH)

SUGGESTED MAXIMUM SPACING OF CHANNELIZING DEVICES AND MINIMUM DESIRABLE TAPER LENGTHS

Texas Department of Transportation

Traffic Operations Division Standard

BARRICADE AND CONSTRUCTION CHANNELIZING DEVICES

BC(9)-14

FILE: bc-14.dgn	DN: TxDOT	CK: TxDOT	DW: TxDOT	CK: TxDOT
© TxDOT November 2002	CONT	SECT	JOB	HIGHWAY
REVISIONS 9-07 8-14 7-13	DIST	COUNTY		SHEET NO.

DISCLAIMER:
The use of this standard is governed by the "Texas Engineering Practice Act". No warranty of any kind is made by TxDOT for any purpose whatsoever. TxDOT assumes no responsibility for the conversion of this standard to other formats or for incorrect results or damages resulting from its use.

TYPE 3 BARRICADES

1. Refer to the Compliant Work Zone Traffic Control Devices List (CWZTCD) for details of the Type 3 Barricades and a list of all materials used in the construction of Type 3 Barricades.
2. Type 3 Barricades shall be used at each end of construction projects closed to all traffic.
3. Barricades extending across a roadway should have stripes that slope downward in the direction toward which traffic must turn in detouring. When both right and left turns are provided, the chevron striping may slope downward in both directions from the center of the barricade. Where no turns are provided at a closed road striping should slope downward in both directions toward the center of roadway.
4. Striping of rails, for the right side of the roadway, should slope downward to the left. For the left side of the roadway, striping should slope downward to the right.
5. Identification markings may be shown only on the back of the barricade rails. The maximum height of letters and/or company logos used for identification shall be 1".
6. Barricades shall not be placed parallel to traffic unless an adequate clear zone is provided.
7. Warning lights shall NOT be installed on barricades.
8. Where barricades require the use of weights to keep from turning over, the use of sandbags with dry, cohesionless sand is recommended. The sandbags will be tied shut to keep the sand from spilling and to maintain a constant weight. Sand bags shall not be stacked in a manner that covers any portion of a barricade rails reflective sheeting. Rock, concrete, iron, steel or other solid objects will NOT be permitted. Sandbags should weigh a minimum of 35 lbs and a maximum of 50 lbs. Sandbags shall be made of a durable material that tears upon vehicular impact. Rubber (such as tire inner tubes) shall not be used for sandbags. Sandbags shall only be placed along or upon the base supports of the device and shall not be suspended above ground level or hung with rope, wire, chains or other fasteners.
9. Sheeting for barricades shall be retroreflective Type A conforming to Departmental Material Specification DMS-8300 unless otherwise noted.

Barricades shall NOT be used as a sign support.

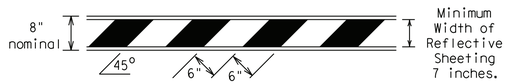

TYPICAL STRIPING DETAIL FOR BARRICADE RAIL

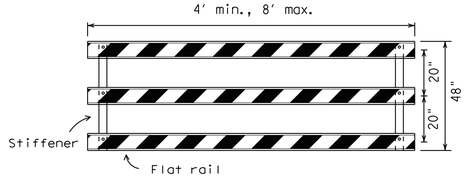

Stiffener may be inside or outside of support, but no more than 2 stiffeners shall be allowed on one barricade.

TYPICAL PANEL DETAIL FOR SKID OR POST TYPE BARRICADES

Each roadway of a divided highway shall be barricaded in the same manner.

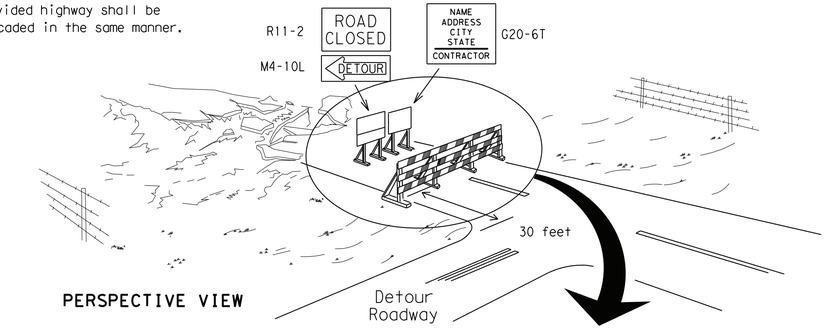

PERSPECTIVE VIEW

The three rails on Type 3 barricades shall be reflectorized orange and reflective white stripes on one side facing one-way traffic and both sides for two-way traffic.

Barricade striping should slant downward in the direction of detour.

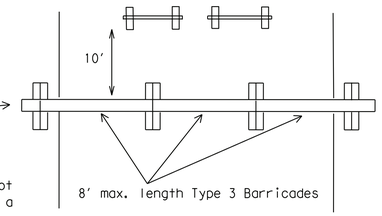

PLAN VIEW

1. Signs should be mounted on independent supports at a 7 foot mounting height in center of roadway. The signs should be a minimum of 10 feet behind Type 3 Barricades.
2. Advance signing shall be as specified elsewhere in the plans.

TYPE 3 BARRICADE (POST AND SKID) TYPICAL APPLICATION

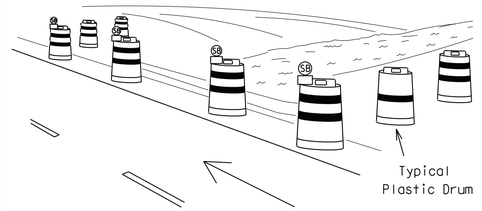

PERSPECTIVE VIEW

1. Where positive redirectional capability is provided, drums may be omitted.
2. Plastic construction fencing may be used with drums for safety as required in the plans.
3. Vertical Panels on flexible support may be substituted for drums when the shoulder width is less than 4 feet.
4. When the shoulder width is greater than 12 feet, steady-burn lights may be omitted if drums are used.
5. Drums must extend the length of the culvert widening.

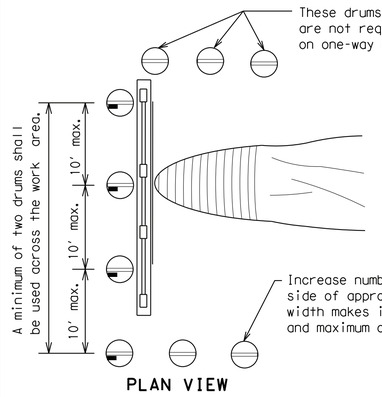

PLAN VIEW

LEGEND	
	Plastic drum
	Plastic drum with steady burn light or yellow warning reflector
SB	Steady burn warning light or yellow warning reflector

CULVERT WIDENING OR OTHER ISOLATED WORK WITHIN THE PROJECT LIMITS

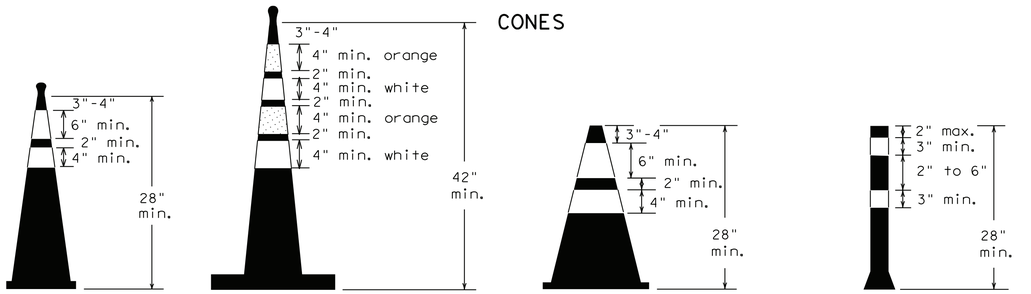

Two-Piece cones

One-Piece cones

Tubular Marker

28" Cones shall have a minimum weight of 9 1/2 lbs.

42" 2-piece cones shall have a minimum weight of 30 lbs. including base.

1. Traffic cones and tubular markers shall be predominantly orange, and meet the height and weight requirements shown above.
2. One-piece cones have the body and base of the cone molded in one consolidated unit. Two-piece cones have a cone shaped body and a separate rubber base, or ballast, that is added to keep the device upright and in place.
3. Two-piece cones may have a handle or loop extending up to 8" above the minimum height shown, in order to aid in retrieving the device.
4. Cones or tubular markers used at night shall have white or white and orange reflective bands as shown above. The reflective bands shall have a smooth, sealed outer surface and meet the requirements of Departmental Material Specification DMS-8300 Type A.
5. 28" cones and tubular markers are generally suitable for short duration and short-term stationary work as defined on BC(4). These should not be used for intermediate-term or long-term stationary work unless personnel is on-site to maintain them in their proper upright position.
6. 42" two-piece cones, vertical panels or drums are suitable for all work zone durations.
7. Cones or tubular markers used on each project should be of the same size and shape.

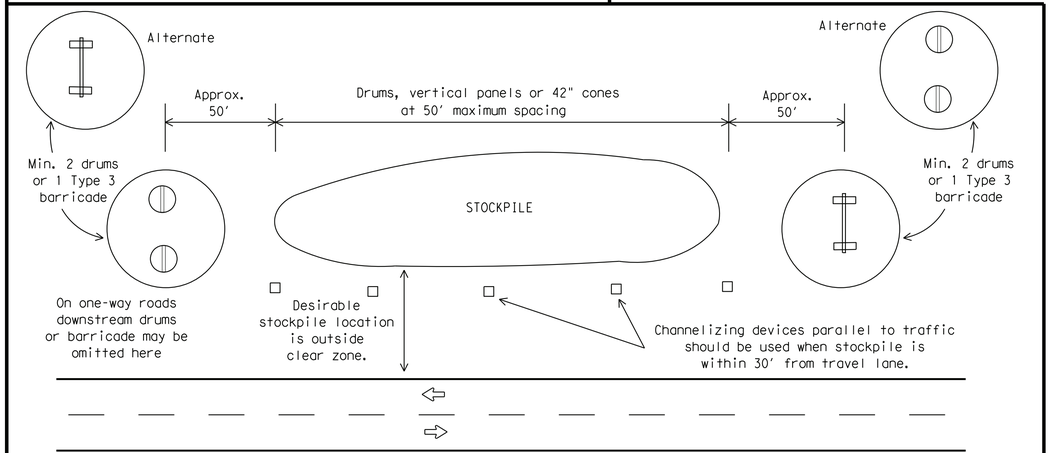

TRAFFIC CONTROL FOR MATERIAL STOCKPILES

THIS DEVICE SHALL NOT BE USED ON PROJECTS LET AFTER MARCH 2014.

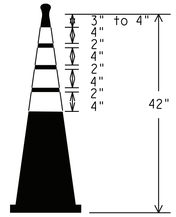

EDGELINE CHANNELIZER

1. This device is intended only for use in place of a vertical panel to channelize traffic by indicating the edge of the travel lane. It is not intended to be used in transitions or tapers.
2. This device shall not be used to separate lanes of traffic (opposing or otherwise) or warn of objects.
3. This device is based on a 42 inch, two-piece cone with an alternate striping pattern: four 4 inch retroreflective bands, with an approximate 2 inch gap between bands. The color of the band should correspond to the color of the edgeline (yellow for left edgeline, white for right edgeline) for which the device is substituted or for which it supplements. The reflectorized bands shall be retroreflective Type A conforming to Departmental Material Specification DMS-8300, unless otherwise noted.
4. The base must weigh a minimum of 30 lbs.

Texas Department of Transportation

Traffic Operations Division Standard

BARRICADE AND CONSTRUCTION CHANNELIZING DEVICES

BC(10)-14

FILE: bc-14.dgn	DN: TxDOT	CK: TxDOT	DW: TxDOT	CK: TxDOT
©TxDOT November 2002	CONT	SECT	JOB	HIGHWAY
REVISIONS 9-07 8-14 7-13	DIST	COUNTY		SHEET NO.

DATE:
FILE:

DISCLAIMER:
The use of this standard is governed by the "Texas Engineering Practice Act". No warranty of any kind is made by TxDOT for any purpose whatsoever. TxDOT assumes no responsibility for the conversion of this standard to other formats or for incorrect results or damages resulting from its use.

DATE:
FILE:

WORK ZONE PAVEMENT MARKINGS

GENERAL

1. The Contractor shall be responsible for maintaining work zone and existing pavement markings, in accordance with the standard specifications and special provisions, on all roadways open to traffic within the CSJ limits unless otherwise stated in the plans.
2. Color, patterns and dimensions shall be in conformance with the "Texas Manual on Uniform Traffic Control Devices" (TMUTCD).
3. Additional supplemental pavement marking details may be found in the plans or specifications.
4. Pavement markings shall be installed in accordance with the TMUTCD and as shown on the plans.
5. When short term markings are required on the plans, short term markings shall conform with the TMUTCD, the plans and details as shown on the Standard Plan Sheet WZ(STPM).
6. When standard pavement markings are not in place and the roadway is opened to traffic, DO NOT PASS signs shall be erected to mark the beginning of the sections where passing is prohibited and PASS WITH CARE signs at the beginning of sections where passing is permitted.
7. All work zone pavement markings shall be installed in accordance with Item 662, "Work Zone Pavement Markings."

RAISED PAVEMENT MARKERS

1. Raised pavement markers are to be placed according to the patterns on BC(12).
2. All raised pavement markers used for work zone markings shall meet the requirements of Item 672, "RAISED PAVEMENT MARKERS" and Departmental Material Specification DMS-4200 or DMS-4300.

PREFABRICATED PAVEMENT MARKINGS

1. Removable prefabricated pavement markings shall meet the requirements of DMS-8241.
2. Non-removable prefabricated pavement markings (foil back) shall meet the requirements of DMS-8240.

MAINTAINING WORK ZONE PAVEMENT MARKINGS

1. The Contractor will be responsible for maintaining work zone pavement markings within the work limits.
2. Work zone pavement markings shall be inspected in accordance with the frequency and reporting requirements of work zone traffic control device inspections as required by Form 599.
3. The markings should provide a visible reference for a minimum distance of 300 feet during normal daylight hours and 160 feet when illuminated by automobile low-beam headlights at night, unless sight distance is restricted by roadway geometrics.
4. Markings failing to meet this criteria within the first 30 days after placement shall be replaced at the expense of the Contractor as per Specification Item 662.

REMOVAL OF PAVEMENT MARKINGS

1. Pavement markings that are no longer applicable, could create confusion or direct a motorist toward or into the closed portion of the roadway shall be removed or obliterated before the roadway is opened to traffic.
2. The above shall not apply to detours in place for less than three days, where flaggers and/or sufficient channelizing devices are used in lieu of markings to outline the detour route.
3. Pavement markings shall be removed to the fullest extent possible, so as not to leave a discernable marking. This shall be by any method approved by TxDOT Specification Item 677 for "Eliminating Existing Pavement Markings and Markers".
4. The removal of pavement markings may require resurfacing or seal coating portions of the roadway as described in Item 677.
5. Subject to the approval of the Engineer, any method that proves to be successful on a particular type pavement may be used.
6. Blast cleaning may be used but will not be required unless specifically shown in the plans.
7. Over-painting of the markings SHALL NOT BE permitted.
8. Removal of raised pavement markers shall be as directed by the Engineer.
9. Removal of existing pavement markings and markers will be paid for directly in accordance with Item 677, "ELIMINATING EXISTING PAVEMENT MARKINGS AND MARKERS," unless otherwise stated in the plans.
10. Black-out marking tape may be used to cover conflicting existing markings for periods less than two weeks when approved by the Engineer.

Temporary Flexible-Reflective Roadway Marker Tabs

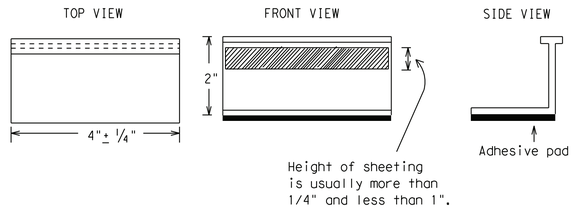

STAPLES OR NAILS SHALL NOT BE USED TO SECURE TEMPORARY FLEXIBLE-REFLECTIVE ROADWAY MARKER TABS TO THE PAVEMENT SURFACE

1. Temporary flexible-reflective roadway marker tabs used as guidemarks shall meet the requirements of DMS-8242.
2. Tabs detailed on this sheet are to be inspected and accepted by the Engineer or designated representative. Sampling and testing is not normally required, however at the option of the Engineer, either "A" or "B" below may be imposed to assure quality before placement on the roadway.
   A. Select five (5) or more tabs at random from each lot or shipment and submit to the Construction Division, Materials and Pavement Section to determine specification compliance.
   B. Select five (5) tabs and perform the following test. Affix five (5) tabs at 24 inch intervals on an asphaltic pavement in a straight line. Using a medium size passenger vehicle or pickup, run over the markers with the front and rear tires at a speed of 35 to 40 miles per hour, four (4) times in each direction. No more than one (1) out of the five (5) reflective surfaces shall be lost or displaced as a result of this test.
3. Small design variances may be noted between tab manufacturers.
4. See Standard Sheet WZ(STPM) for tab placement on new pavements. See Standard Sheet TCP(7-1) for tab placement on seal coat work.

RAISED PAVEMENT MARKERS USED AS GUIDEMARKS

1. Raised pavement markers used as guidemarks shall be from the approved product list, and meet the requirements of DMS-4200.
2. All temporary construction raised pavement markers provided on a project shall be of the same manufacturer.
3. Adhesive for guidemarks shall be bituminous material hot applied or butyl rubber pad for all surfaces, or thermoplastic for concrete surfaces.

Guidemarks shall be designated as:
YELLOW - (two amber reflective surfaces with yellow body).
WHITE - (one silver reflective surface with white body).

DEPARTMENTAL MATERIAL SPECIFICATIONS	
PAVEMENT MARKERS (REFLECTORIZED)	DMS-4200
TRAFFIC BUTTONS	DMS-4300
EPOXY AND ADHESIVES	DMS-6100
BITUMINOUS ADHESIVE FOR PAVEMENT MARKERS	DMS-6130
PERMANENT PREFABRICATED PAVEMENT MARKINGS	DMS-8240
TEMPORARY REMOVABLE, PREFABRICATED PAVEMENT MARKINGS	DMS-8241
TEMPORARY FLEXIBLE, REFLECTIVE ROADWAY MARKER TABS	DMS-8242

A list of prequalified reflective raised pavement markers, non-reflective traffic buttons, roadway marker tabs and other pavement markings can be found at the Material Producer List web address shown on BC(1).

Texas Department of Transportation

Traffic Operations Division Standard

BARRICADE AND CONSTRUCTION PAVEMENT MARKINGS

BC(11)-14

FILE: bc-14.dgn	DN: TxDOT	CK: TxDOT	DW: TxDOT	CK: TxDOT
©TxDOT February 1998	CONT	SECT	JOB	HIGHWAY
REVISIONS				
2-98 9-07	DIST	COUNTY		SHEET NO.
1-02 7-13				
11-02 8-14				

105

DISCLAIMER:
The use of this standard is governed by the "Texas Engineering Practice Act". No warranty of any kind is made by TxDOT for any purpose whatsoever. TxDOT assumes no responsibility for the conversion of this standard to other formats or for incorrect results or damages resulting from its use.

DATE:
FILE:

PAVEMENT MARKING PATTERNS

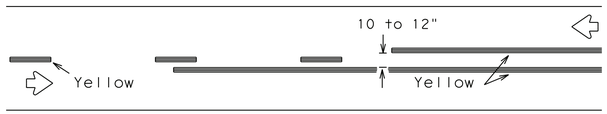

REFLECTORIZED PAVEMENT MARKINGS - PATTERN A

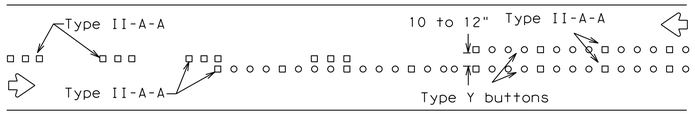

RAISED PAVEMENT MARKERS - PATTERN A

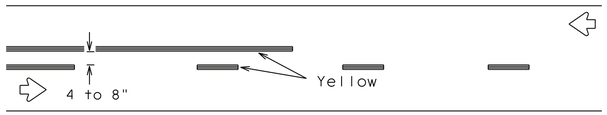

REFLECTORIZED PAVEMENT MARKINGS - PATTERN B

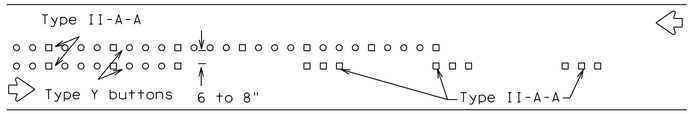

RAISED PAVEMENT MARKERS - PATTERN B

Pattern A is the TXDOT Standard, however Pattern B may be used if approved by the Engineer.
Prefabricated markings may be substituted for reflectorized pavement markings.

CENTER LINE & NO-PASSING ZONE BARRIER LINES FOR TWO-LANE, TWO-WAY HIGHWAYS

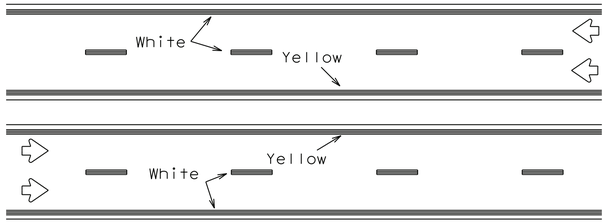

REFLECTORIZED PAVEMENT MARKINGS

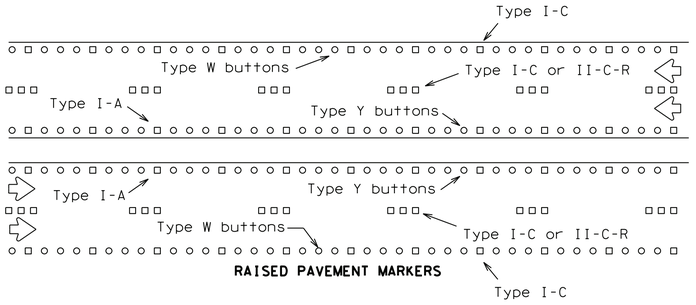

RAISED PAVEMENT MARKERS

Prefabricated markings may be substituted for reflectorized pavement markings.

EDGE & LANE LINES FOR DIVIDED HIGHWAY

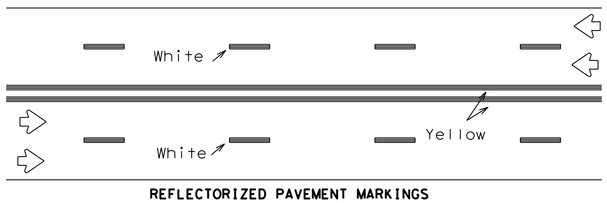

REFLECTORIZED PAVEMENT MARKINGS

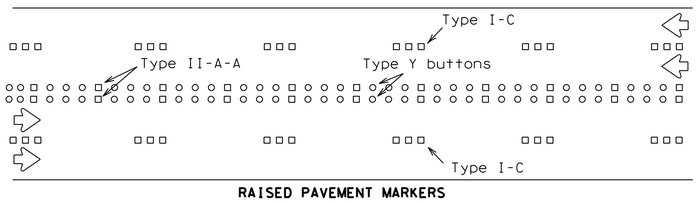

RAISED PAVEMENT MARKERS

Prefabricated markings may be substituted for reflectorized pavement markings.

LANE & CENTER LINES FOR MULTILANE UNDIVIDED HIGHWAYS

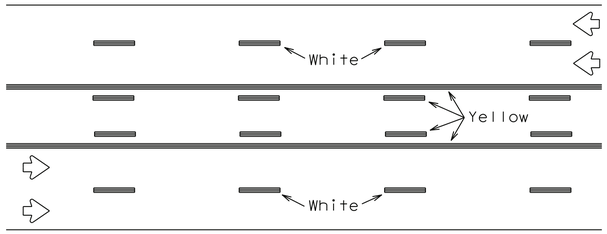

REFLECTORIZED PAVEMENT MARKINGS

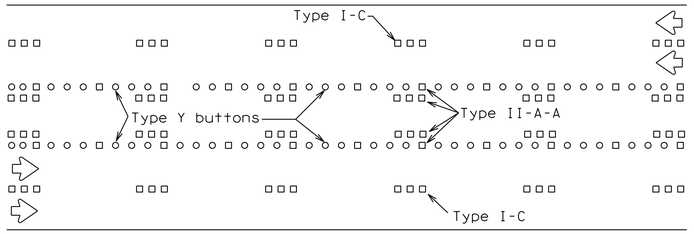

RAISED PAVEMENT MARKERS

Prefabricated markings may be substituted for reflectorized pavement markings.

TWO-WAY LEFT TURN LANE

STANDARD WORK ZONE PAVEMENT MARKINGS DETAILS

SOLID LINES

DOUBLE NO-PASSING LINE

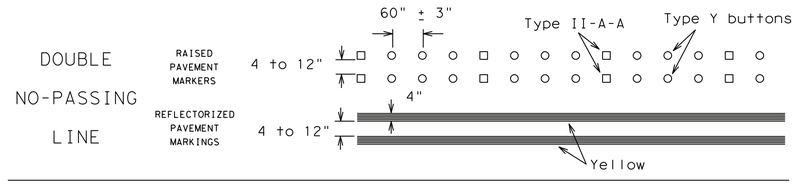

EDGE LINE OR SINGLE NO-PASSING LINE

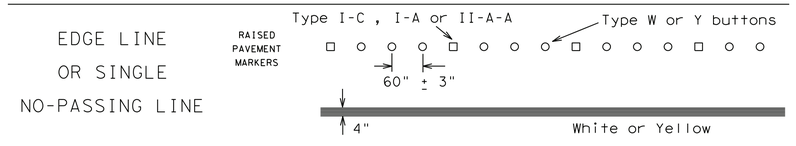

WIDE LINE

(FOR LEFT TURN CHANNELIZING LINE OR CHANNELIZING LINE USED TO DISCOURAGE LANE CHANGING.)

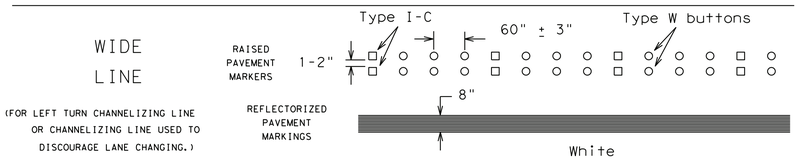

BROKEN LINES

CENTER LINE OR LANE LINE

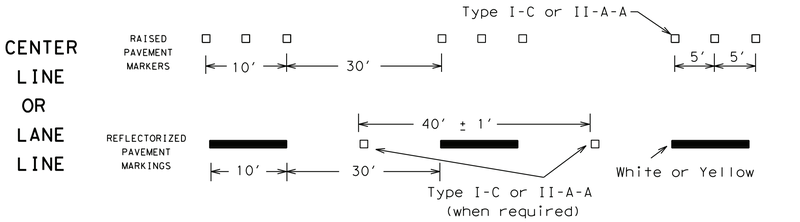

AUXILIARY OR LANEDROP LINE

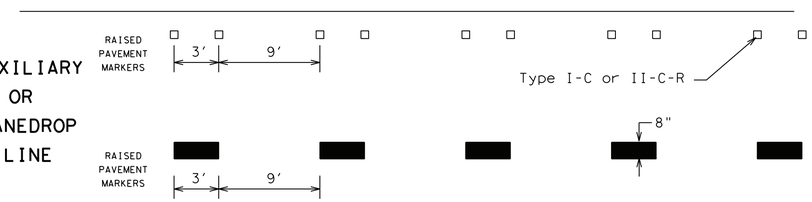

REMOVABLE MARKINGS WITH RAISED PAVEMENT MARKERS

If raised pavement markers are used to supplement REMOVABLE markings, the markers shall be applied to the top of the tape at the approximate mid length of tape used for broken lines or at 20 foot spacing for solid lines. This allows an easier removal of raised pavement markers and tape.

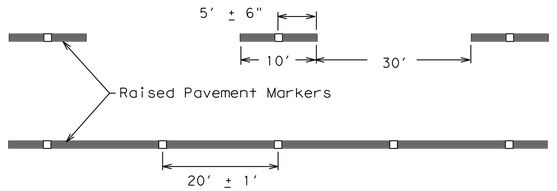

Centerline only - not to be used on edge lines

Raised pavement markers used as standard pavement markings shall be from the approved products list and meet the requirements of Item 672 "RAISED PAVEMENT MARKERS."

Texas Department of Transportation

Traffic Operations Division Standard

BARRICADE AND CONSTRUCTION PAVEMENT MARKING PATTERNS

BC(12)-14

FILE: bc-14.dgn	DN: TxDOT	CK: TxDOT	DW: TxDOT	CK: TxDOT
©TxDOT February 1998	CONT	SECT	JOB	HIGHWAY
REVISIONS				
1-97 9-07	DIST	COUNTY		SHEET NO.
2-98 7-13				
11-02 8-14				

DISCLAIMER:
The use of this standard is governed by the "Texas Engineering Practice Act". No warranty of any kind is made by TxDOT for any purpose whatsoever. TxDOT assumes no responsibility for the conversion of this standard to other formats or for incorrect results or damages resulting from its use.

DATE:
FILE:

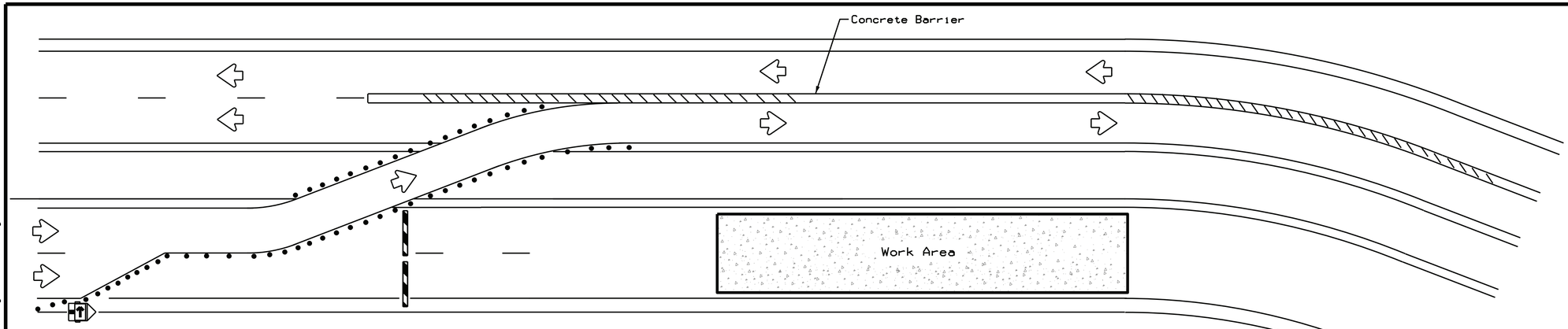

LEGEND	
	Type 3 Barricade
• • •	Channelizing Devices
	Trailer Mounted Flashing Arrow Board
	Sign
\ \ \ \	Safety glare fence

BARRIER DELINEATION WITH MODULAR GLARE SCREENS

NOTES:

1. Length of Safety Glare Fence will be specified elsewhere in the plans.
2. The cumulative nominal length of the modular units shall equal the length of the individual sections of temporary concrete traffic barrier on which they are installed so the joint between barrier sections will not be spanned by any one unit.
3. Panel/blades will be designed such that reflective sheeting conforming with Departmental Material Specification DMS-8300, Sign Face Materials, Type B or C Yellow, minimum size of 2 inches by 12 inches can be attached to the edge of the panel/blade. The sheeting shall be attached to one panel/blade per section of concrete barrier not to exceed a spacing of 30 feet. Barrier reflectors are not necessary when panel/blades are installed with reflective sheeting as described.
4. Payment for these devices will be under statewide Special Specification "Modular Glare Screens for Headlight Barrier."
5. This detail is only intended to show types of locations where Glare Screens would be appropriate. Required signing and other devices shall be as shown elsewhere in the plans.

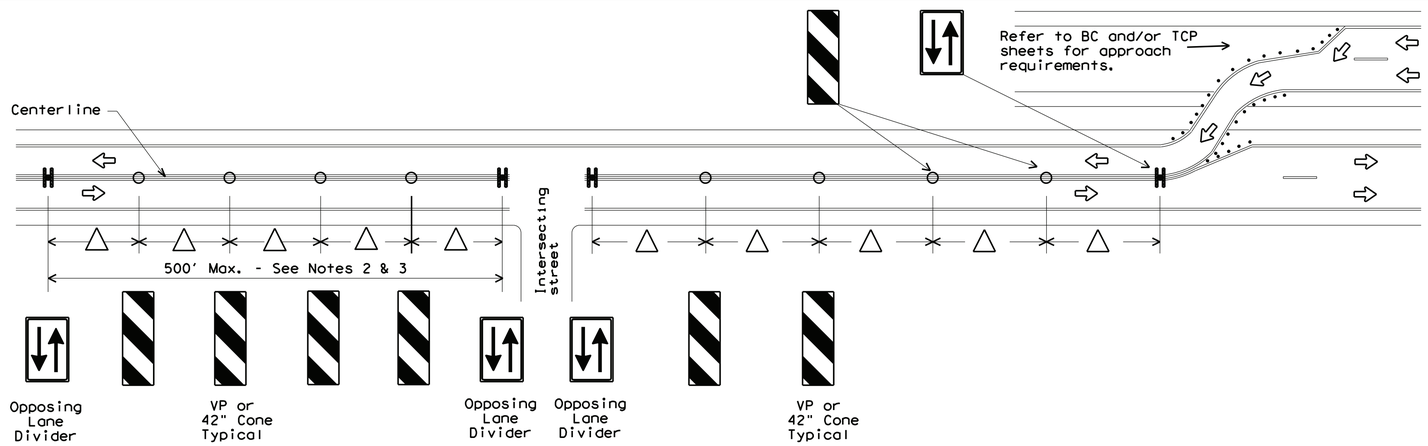

VERTICAL PANELS & OPPOSING TRAFFIC LANE DIVIDERS (OTLD) SEPARATING TWO-WAY TRAFFIC ON NORMALLY DIVIDED HIGHWAYS

NOTES:

1. When two-lane, two way traffic control must be maintained on one roadway of a normally divided highway, opposing traffic shall be separated with either temporary traffic barriers, channelizing devices, or a temporary raised island throughout the length of the two way operation. The above Typical Application is intended to show the appropriate application of channelizing devices when they are used for this purpose. This is not a traffic control plan. If this detail is to be used for other types of roads or applications, those locations should be stated elsewhere in the plans.
2. △ Space devices according to the Tangent Spacing shown on the Device Spacing table on BC(9) but not exceeding 100'.
3. Every fifth device should be an OTLD except when spaced closer to accommodate an intersection. An OTLD should be the first device on each side of intersecting streets or roads.
4. Locations where surface mount bases with adhesives or self-righting devices will be required in order to maintain them in their proper position should be noted elsewhere in the plans.

DEPARTMENTAL MATERIAL SPECIFICATIONS	
SIGN FACE MATERIALS	DMS-8300
DELINEATORS AND OBJECT MARKERS	DMS-8600
MODULAR GLARE SCREENS FOR HEADLIGHT BARRIER	DMS-8610

Only pre-qualified products shall be used. A copy of the "Compliant Work Zone Traffic Control Devices List" (CWZTCD) describes pre-qualified products and their sources and may be found at the following web address:
http://www.txdot.gov/txdot_library/publications/construction.htm

Texas Department of Transportation

Traffic Operations Division Standard

TRAFFIC CONTROL PLAN TYPICAL DETAILS

WZ(TD)-13

FILE: wztd-13.dgn	DN: TxDOT	CK: TxDOT	DW: TxDOT	CK: TxDOT
© TxDOT February 1998	CONT	SECT	JOB	HIGHWAY
REVISIONS 4-98 3-03 7-13	DIST	COUNTY		SHEET NO.

110

DISCLAIMER:
The use of this standard is governed by the "Texas Engineering Practice Act". No warranty of any kind is made by TxDOT for any purpose whatsoever. TxDOT assumes no responsibility for the conversion of this standard to other formats or for incorrect results or damages resulting from its use.

DATE:
FILE:

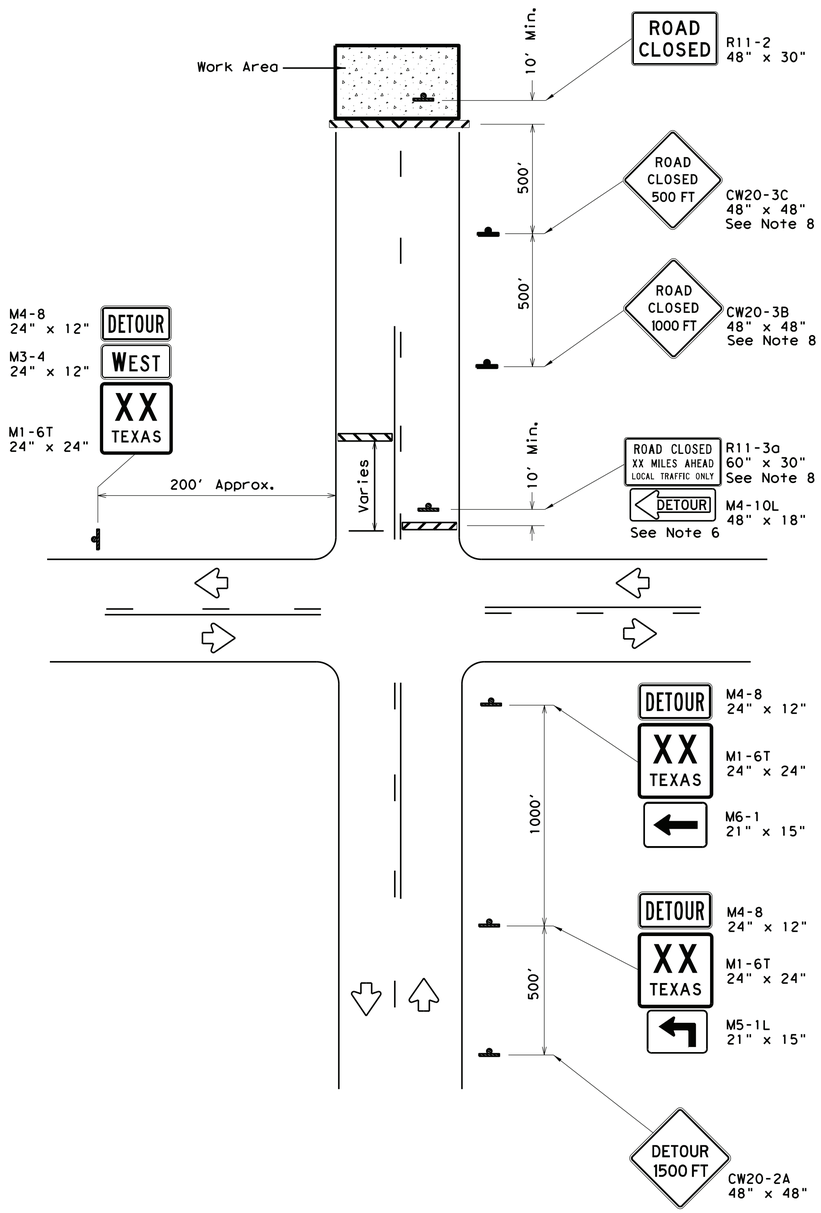

ROAD CLOSURE BEYOND THE INTERSECTION

Signing for a Numbered Route with an Off-Site Detour

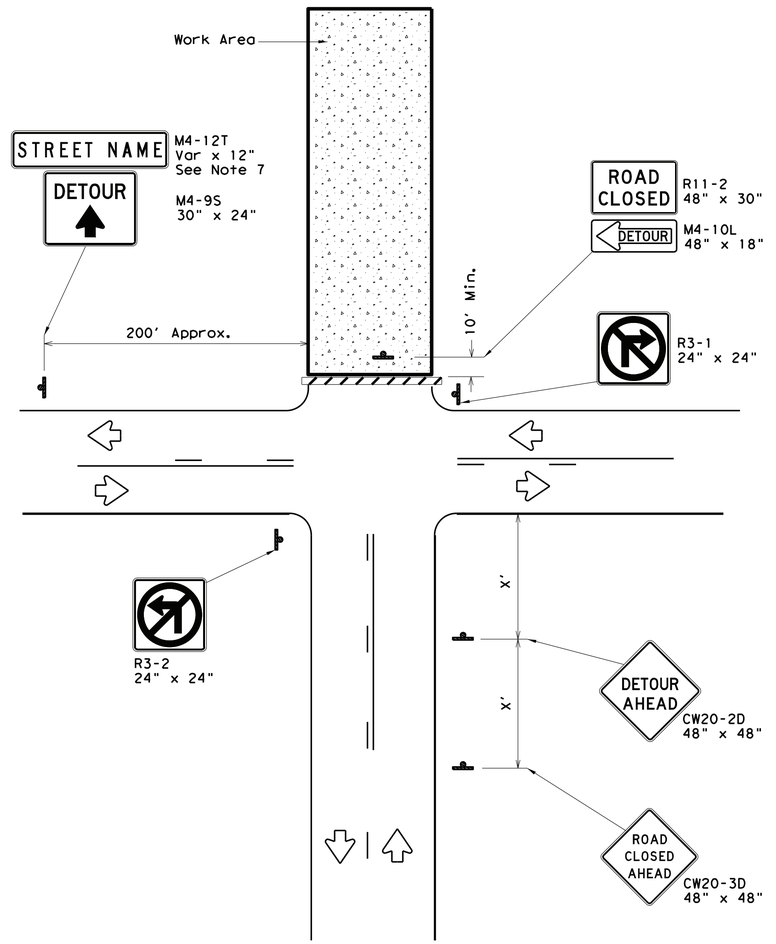

ROAD CLOSURE AT THE INTERSECTION

Signing for an Un-numbered Route with an Off-Site Detour

LEGEND	
	Type 3 Barricade
	Sign

Posted Speed *	Minimum Sign Spacing "X" Distance
30	120'
35	160'
40	240'
45	320'
50	400'
55	500'
60	600'
65	700'
70	800'
75	900'

* Conventional Roads Only

GENERAL NOTES

1. This sheet is intended to provide details for temporary work zone road closures. For permanent road closure details see the D&OM standards.
2. Barricades used shall meet the requirements shown on Barricade and Construction Standard BC(10) and listed on the Compliant Work Zone Traffic Control Devices list (CWZTCD).
3. Stockpiled materials shall not be placed on the traffic side of barricades.
4. Barricades at the road closure should extend from pavement edge to pavement edge.
5. Detour signing shown is intended to illustrate the type of signing that is appropriate for numbered routes or un-numbered routes as labeled. It does not indicate the full extent of detour signing required. Detour routes should be signed as shown elsewhere in the plans.
6. If the road is open for a significant distance beyond the intersection or there are significant origin/destination points beyond the intersection, the signs and barricades at this location should be located at the edge of the traveled way.
7. The Street Name (M4-12T) sign is to be placed above the DETOUR (M4-9S) sign.
8. For urban areas where there is a shorter distance between the intersection and the actual closure location, the ROAD CLOSED XX MILES AHEAD (R11-3a) sign may be replaced with a ROAD CLOSED TO THRU TRAFFIC (R11-4) sign. If adequate space does not exist between the intersection and the closure a single ROAD CLOSED AHEAD (CW20-3D) sign spaced as per the table above may replace the ROAD CLOSED 1000 FT (CW20-3B) and ROAD CLOSED 500 FT (CW20-3C) signs.
9. Signs and barricades shown shall be subsidiary to Item 502. Locations where these details will be required shall be as shown elsewhere in the plans.

Texas Department of Transportation

Traffic Operations Division Standard

WORK ZONE ROAD CLOSURE DETAILS

WZ(RCD)-13

FILE: wzrcd-13.dgn	DN: TxDOT	CK: TxDOT	DW: TxDOT	CK: TxDOT
© TxDOT August 1995	CONT	SECT	JOB	HIGHWAY
REVISIONS				
1-97 4-98 7-13	DIST	COUNTY		SHEET NO.
2-98 3-03				

DISCLAIMER:
The use of this standard is governed by the "Texas Engineering Practice Act". No warranty of any kind is made by TxDOT for any purpose whatsoever. TxDOT assumes no responsibility for the conversion of this standard to other formats or for incorrect results or damages resulting from its use.

DATE:
FILE:

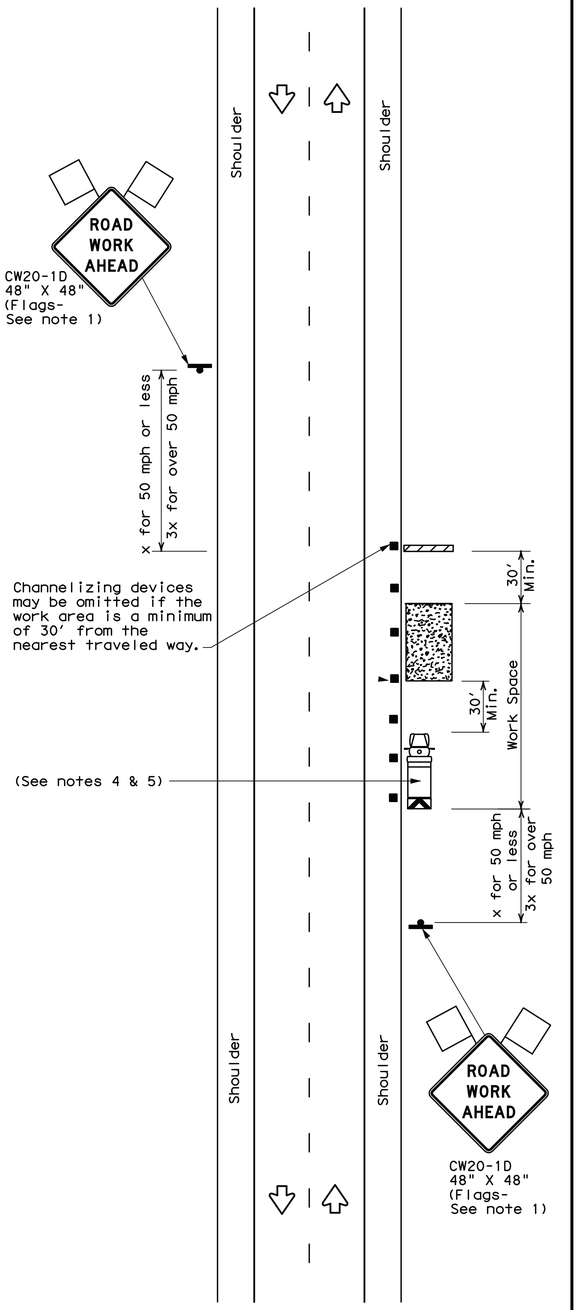

TCP (2-1a)

WORK SPACE NEAR SHOULDER
Conventional Roads

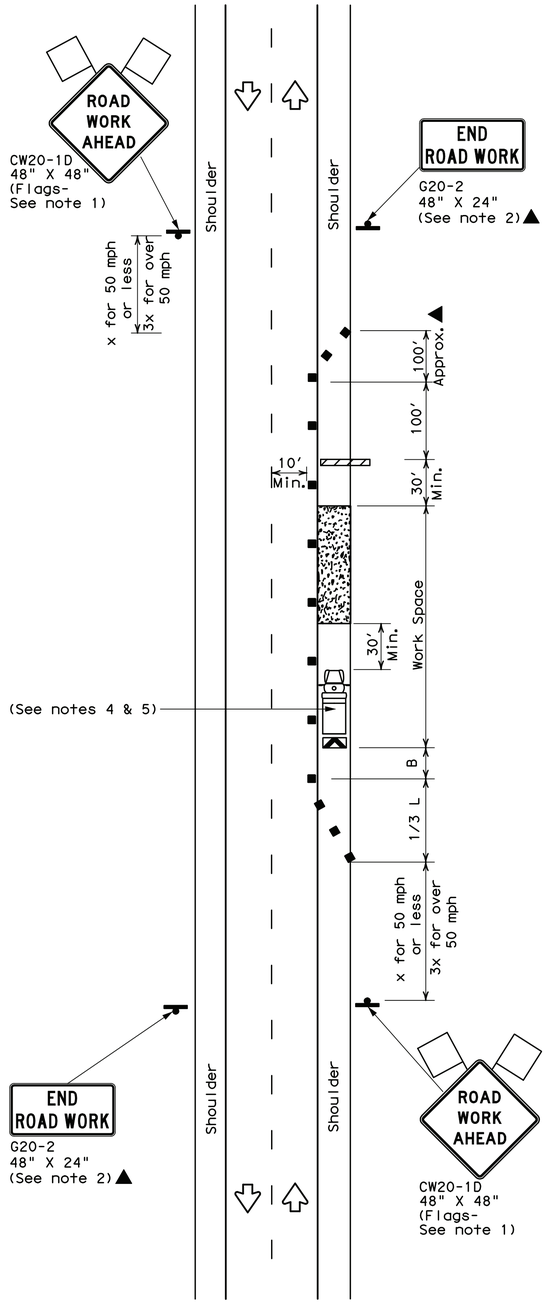

TCP (2-1b)

WORK SPACE ON SHOULDER
Conventional Roads

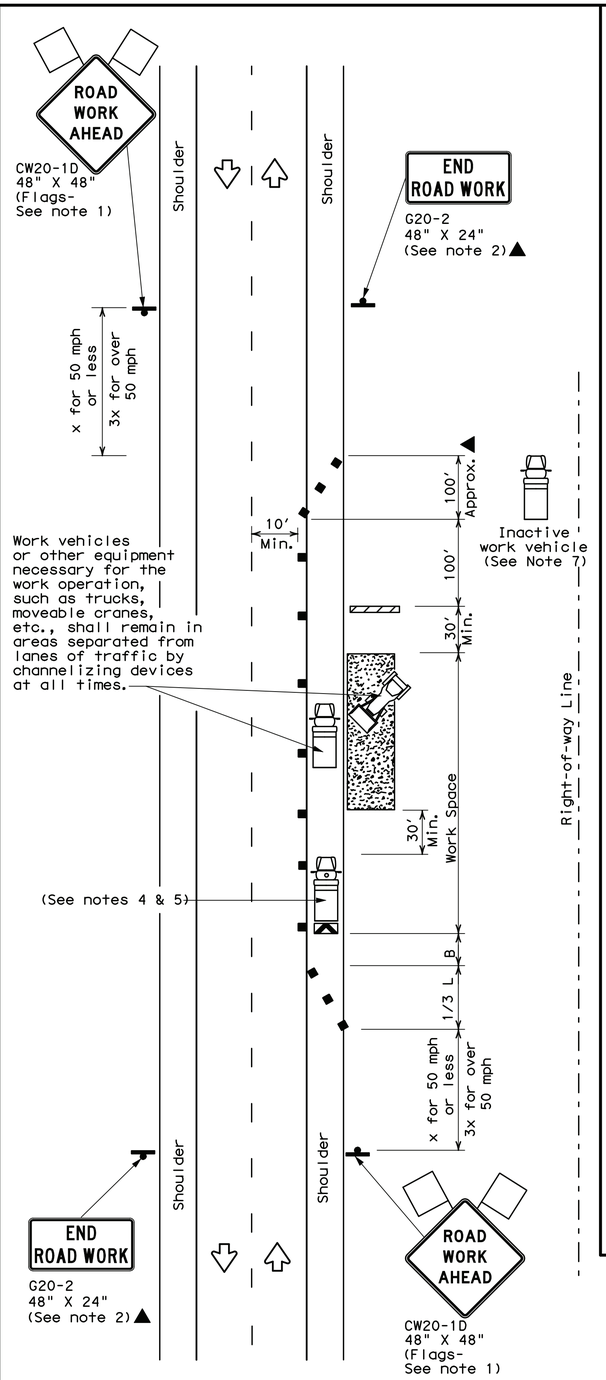

TCP (2-1c)

WORK VEHICLES ON SHOULDER
Conventional Roads

LEGEND			
	Type 3 Barricade	■ ■	Channelizing Devices
	Heavy Work Vehicle		Truck Mounted Attenuator (TMA)
	Trailer Mounted Flashing Arrow Board	(M)	Portable Changeable Message Sign (PCMS)
	Sign		Traffic Flow
	Flag		Flagger

Posted Speed *	Formula	Minimum Desirable Taper Lengths ** 10' Offset	11' Offset	12' Offset	Suggested Maximum Spacing of Channelizing Devices: On a Taper	On a Tangent	Minimum Sign Spacing "X" Distance	Suggested Longitudinal Buffer Space "B"
30	$L=\frac{WS^2}{60}$	150'	165'	180'	30'	60'	120'	90'
35		205'	225'	245'	35'	70'	160'	120'
40		265'	295'	320'	40'	80'	240'	155'
45	L=WS	450'	495'	540'	45'	90'	320'	195'
50		500'	550'	600'	50'	100'	400'	240'
55		550'	605'	660'	55'	110'	500'	295'
60		600'	660'	720'	60'	120'	600'	350'
65		650'	715'	780'	65'	130'	700'	410'
70		700'	770'	840'	70'	140'	800'	475'
75		750'	825'	900'	75'	150'	900'	540'

* Conventional Roads Only

** Taper lengths have been rounded off.
L=Length of Taper(FT) W=Width of Offset(FT) S=Posted Speed(MPH)

TYPICAL USAGE				
MOBILE	SHORT DURATION	SHORT TERM STATIONARY	INTERMEDIATE TERM STATIONARY	LONG TERM STATIONARY
	✓	✓	✓	✓

GENERAL NOTES

1. Flags attached to signs where shown, are REQUIRED.
2. All traffic control devices illustrated are REQUIRED, except those denoted with the triangle symbol may be omitted when stated in the plans, or for routine maintenance work, when approved by the Engineer.
3. Stockpiled material should be placed a minimum of 30 feet from nearest traveled way.
4. Shadow Vehicle with TMA and high intensity rotating, flashing, oscillating or strobe lights. A Shadow Vehicle with a TMA should be used anytime it can be positioned 30 to 100 feet in advance of the area of crew exposure without adversely affecting the performance or quality of the work. If workers are no longer present but road or work conditions require the traffic control to remain in place, Type 3 Barricades or other channelizing devices may be substituted for the Shadow Vehicle and TMA.
5. Additional Shadow Vehicles with TMAs may be positioned off the paved surface, next to those shown in order to protect a wider work space.
6. See TCP(5-1) for shoulder work on divided highways, expressways and freeways.
7. Inactive work vehicles or other equipment should be parked near the right-of-way line and not parked on the paved shoulder.
8. CW21-5 "SHOULDER WORK" signs may be used in place of CW21-1D "ROAD WORK AHEAD" signs for shoulder work on conventional roadways.

For construction or maintenance contract work, specific project requirements for shadow vehicles can be found in the project GENERAL NOTES for Item 502, Barricades, Signs and Traffic Handling.

Texas Department of Transportation
Traffic Operations Division

TRAFFIC CONTROL PLAN CONVENTIONAL ROAD SHOULDER WORK

TCP(2-1)-12

© TxDOT December 1985

DN: TXDOT	CK: TXDOT	DW: TXDOT	CK: TXDOT

REVISIONS
2-94 2-12
8-95
1-97
4-98

CONT	SECT	JOB	HIGHWAY

DIST	COUNTY	SHEET NO.

DISCLAIMER:
The use of this standard is governed by the "Texas Engineering Practice Act". No warranty of any kind is made by TxDOT for any purpose whatsoever. TxDOT assumes no responsibility for the conversion of this standard to other formats or for incorrect results or damages resulting from its use.

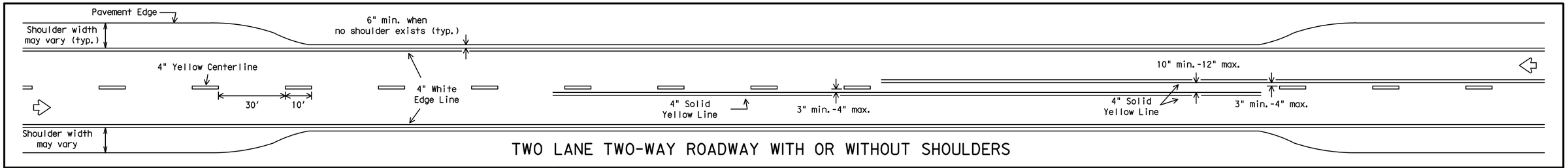

TWO LANE TWO-WAY ROADWAY WITH OR WITHOUT SHOULDERS

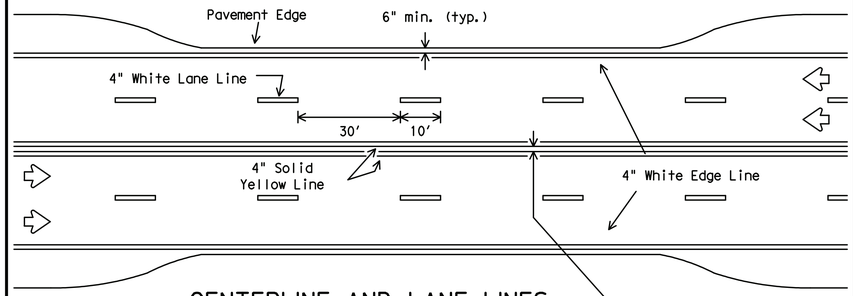

CENTERLINE AND LANE LINES FOUR LANE TWO-WAY ROADWAY WITH OR WITHOUT SHOULDERS

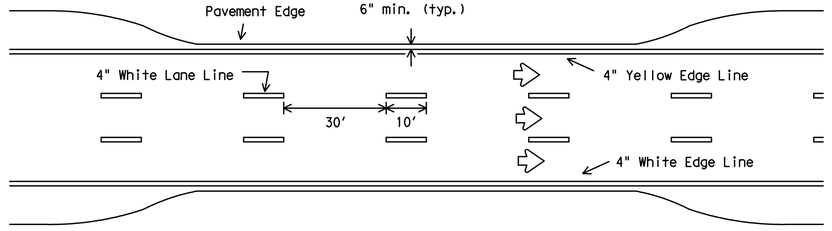

EDGE LINE AND LANE LINES ONE-WAY ROADWAY WITH OR WITHOUT SHOULDERS

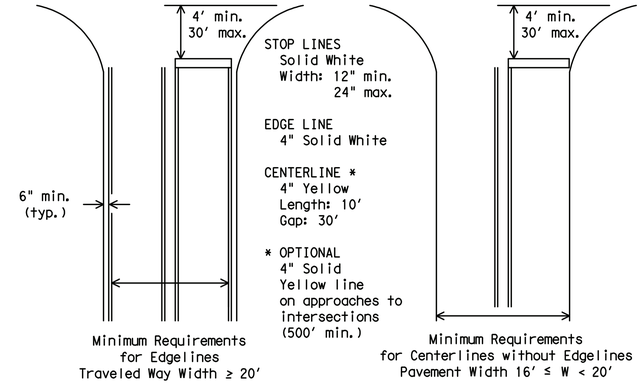

GUIDE FOR PLACEMENT OF STOP LINES, EDGE LINE & CENTERLINE

Based on Traveled Way and Pavement Widths for Undivided Highways

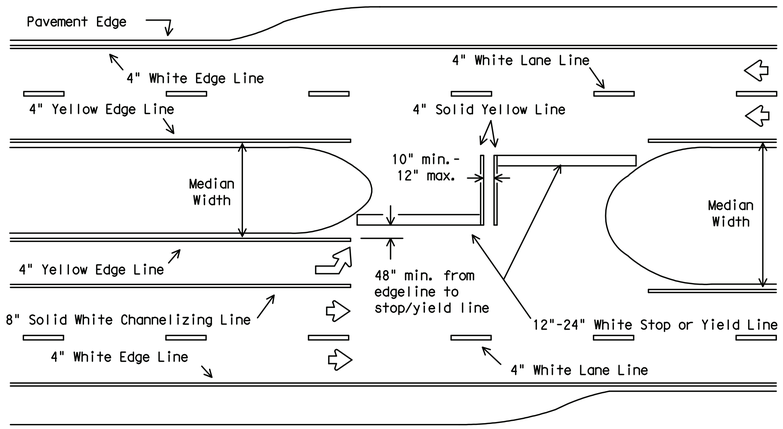

All medians shall be field measured to determine the location of necessary striping. Stop/Yield bars and centerlines shall be placed when the median width is greater than 30 ft. The median width is defined as the area between two roadways of a divided highway measured from edge of traveled way to edge of traveled way. The median excludes turn lanes. The median width might be different between intersections, interchanges and of opposite approaches of the same intersection. The narrow median width will be the controlling width to determine if markings are required.

FOUR LANE DIVIDED ROADWAY INTERSECTIONS

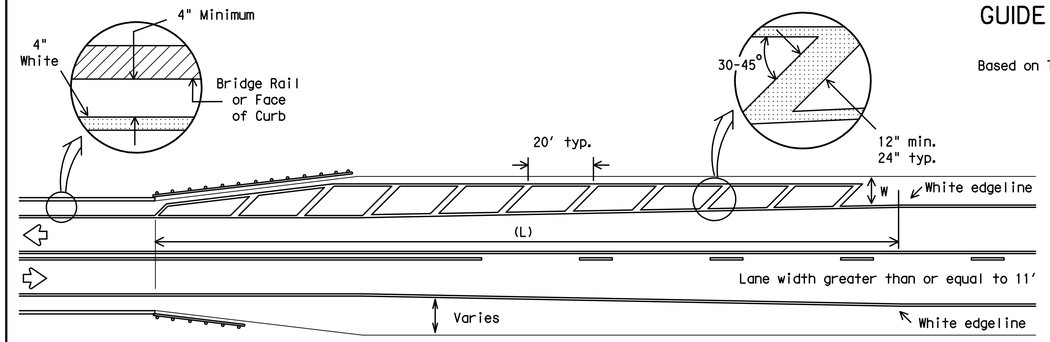

NOTES:

1. No-passing zone on bridge approach is optional but if used, it shall be a minimum 500 feet long.
2. For crosshatching length (L) see Table 1.
3. The width of the offset (W) and the required crosshatching width is the full shoulder width in advance of the bridge.
4. The crosshatching is not required if delineators or barrier reflectors are used along the structure.
5. For guard fence details, refer elsewhere in the plans.

ROADWAYS WITH REDUCED SHOULDER WIDTHS ACROSS BRIDGE OR CULVERT

TABLE 1 - TYPICAL LENGTH (L)

Posted Speed *	Formula
≤ 40	$L = \frac{WS^2}{60}$
≥ 45	L=WS

* 85th Percentile Speed may be used on roads where traffic speeds normally exceed the posted speed limit. Crosshatching length should be rounded up to nearest 5 foot increment.

L=Length of Crosshatching (FT.) W=Width of Offset (FT.)
S=Posted Speed (MPH)

EXAMPLES:

An 8 foot shoulder in advance of a bridge reduces to 4 feet on a 70 MPH roadway. The length of the cross-hatching should be:

$L = 8 \times 70 = 560$ ft.

A 4 foot shoulder in advance of a bridge reduces to 2 feet on a 40 MPH roadway. The length of the cross-hatching should be:

$L = 4(40)^2 / 60 = 106.67$ ft. rounded to 110 ft.

GENERAL NOTES

1. Edgeline striping shall be as shown in the plans or as directed by the Engineer. The edgeline should typically be placed a minimum of 6 inches from the edge of pavement. This distance may vary due to pavement raveling or other conditions. Edgelines are not required in curb and gutter sections of roadways.
2. The traveled way includes only that portion of the roadway used for vehicular travel and not the parking lanes, sidewalks, berms and shoulders. The traveled ways shall be measured from the inside of edgeline to inside of edgeline of a two lane roadway.

MATERIAL SPECIFICATIONS	
PAVEMENT MARKERS (REFLECTORIZED)	DMS-4200
EPOXY AND ADHESIVES	DMS-6100
BITUMINOUS ADHESIVE FOR PAVEMENT MARKERS	DMS-6130
TRAFFIC PAINT	DMS-8200
HOT APPLIED THERMOPLASTIC	DMS-8220
PERMANENT PREFABRICATED PAVEMENT MARKINGS	DMS-8240

All pavement marking materials shall meet the required Departmental Material Specifications as specified by the plans.

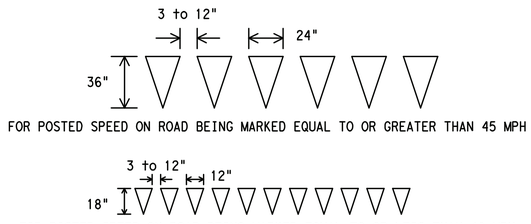

YIELD LINES

Texas Department of Transportation
Traffic Operations Division

TYPICAL STANDARD PAVEMENT MARKINGS

PM(1)-12

© TxDOT November 1978

DN: TXDOT	CK: TXDOT	DW: TXDOT	CK: TXDOT

REVISIONS	CONT	SECT	JOB	HIGHWAY
8-95 2-12				
5-00	DIST	COUNTY		SHEET NO.
8-00				
3-03				

22A

DATE:
FILE:

DISCLAIMER:
The use of this standard is governed by the "Texas Engineering Practice Act". No warranty of any kind is made by TxDOT for any purpose whatsoever. TxDOT assumes no responsibility for the conversion of this standard to other formats or for incorrect results or damages resulting from its use.

REFLECTIVE RAISED PAVEMENT MARKERS FOR VEHICLE POSITIONING GUIDANCE

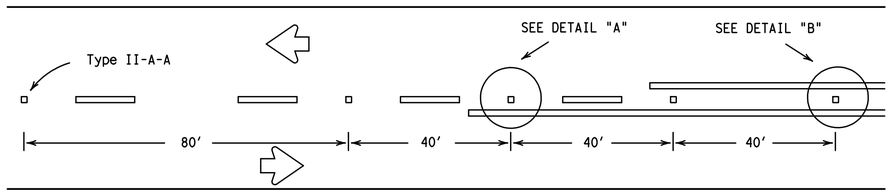

CENTERLINE FOR ALL TWO LANE ROADWAYS

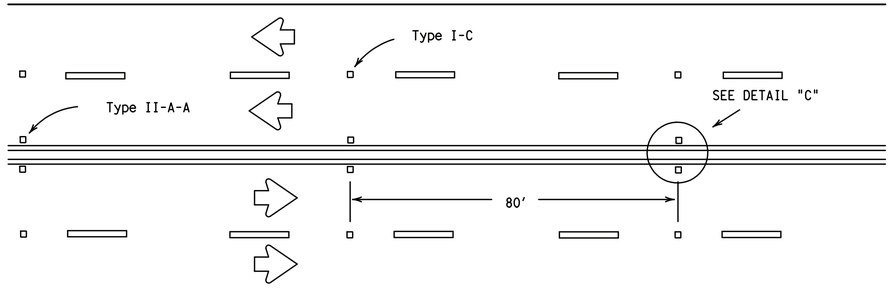

CENTERLINE & LANE LINES FOR FOUR LANE TWO-WAY HIGHWAYS

Raised pavement marker Type I-C, clear face toward normal traffic, shall be placed on 80-foot centers.

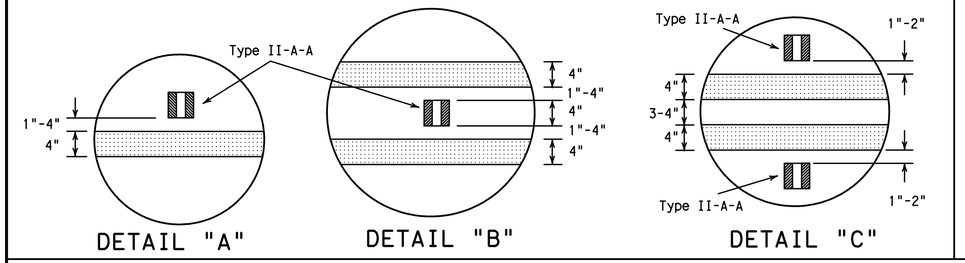

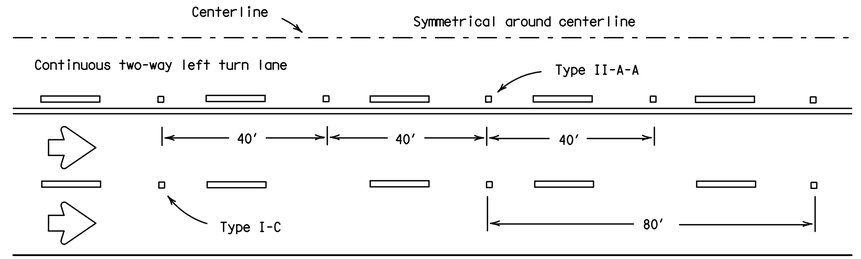

CENTERLINE AND LANE LINES FOR TWO-WAY LEFT TURN LANE

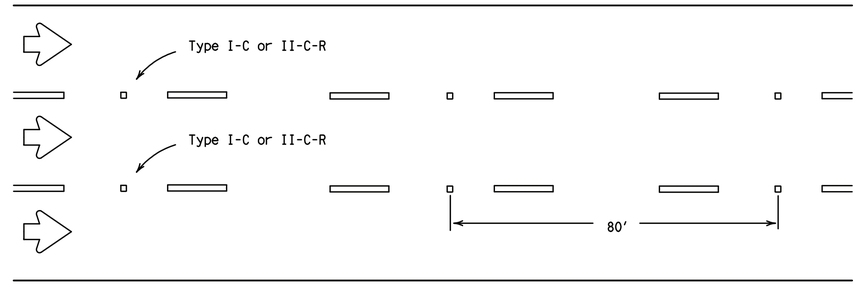

LANE LINES FOR ONE-WAY ROADWAY (NON-FREEWAY FACILITIES)

Raised pavement markers Type II-C-R shall have clear face toward normal traffic and red face toward wrong-way traffic.

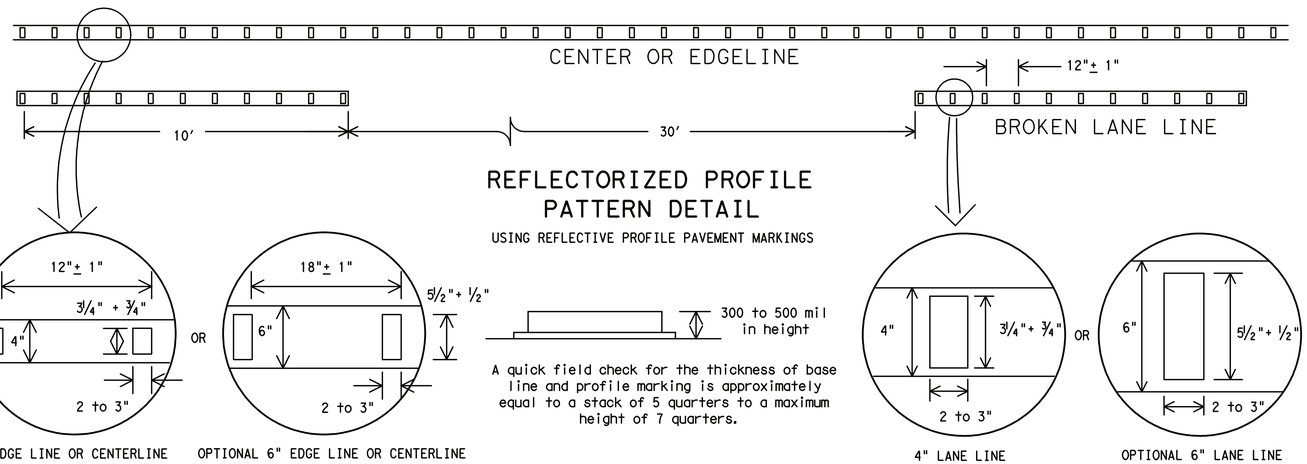

REFLECTORIZED PROFILE PATTERN DETAIL

USING REFLECTIVE PROFILE PAVEMENT MARKINGS

A quick field check for the thickness of base line and profile marking is approximately equal to a stack of 5 quarters to a maximum height of 7 quarters.

NOTE:
Profile markings shall not be placed on roadways with a posted speed limit of 45 MPH or less.

GENERAL NOTES

1. All raised pavement markers placed in broken lines shall be placed in line with and midway between the stripes.
2. On concrete pavements the raised pavement markers should be placed to one side of the longitudinal joints.

MATERIAL SPECIFICATIONS	
PAVEMENT MARKERS (REFLECTORIZED)	DMS-4200
EPOXY AND ADHESIVES	DMS-6100
BITUMINOUS ADHESIVE FOR PAVEMENT MARKERS	DMS-6130
TRAFFIC PAINT	DMS-8200
HOT APPLIED THERMOPLASTIC	DMS-8220
PERMANENT PREFABRICATED PAVEMENT MARKINGS	DMS-8240

All pavement marking materials shall meet the required Departmental Material Specifications as specified by the plans.

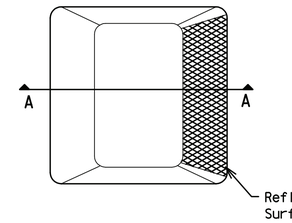

Type I (Top View)

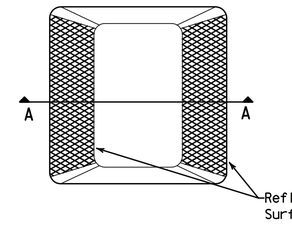

Type II (Top View)

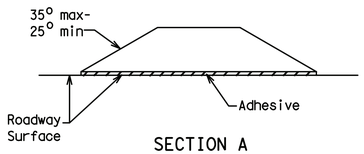

SECTION A

RAISED PAVEMENT MARKERS

Texas Department of Transportation
Traffic Operations Division

POSITION GUIDANCE USING RAISED MARKERS
REFLECTORIZED PROFILE MARKINGS
PM(2)-12

© TxDOT April 1977

DN: TXDOT	CK: TXDOT	DW: TXDOT	CK: TXDOT
CONT	SECT	JOB	HIGHWAY
DIST	COUNTY		SHEET NO.

REVISIONS
4-92 2-10
5-00 2-12
8-00
2-08

DATE:
FILE:

DISCLAIMER:
The use of this standard is governed by the "Texas Engineering Practice Act". No warranty of any kind is made by TxDOT for any purpose whatsoever. TxDOT assumes no responsibility for the conversion of this standard to other formats or for incorrect results or damages resulting from its use.

DATE:
FILE:

REFLECTOR UNIT SIZES FOR DELINEATORS AND OBJECT MARKERS

	SIZE 1	SIZE 2	SIZE 3	SIZE 4
DEVICE	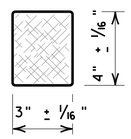	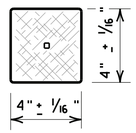	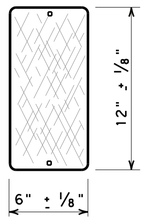	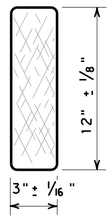
SHEETING	Yellow, White or Red Type B or C reflective sheeting			
NOTE	1. Size 1 and 4 - Direct applied reflective sheeting for use on flexible post (flx). 2. Size 2 and 3 - For use on wing channel (wc) post only. Use approved metal, plastic or fiberglass backplate with 17/64" mounting holes.			

DELINEATORS

	SINGLE		DOUBLE	
DEVICE	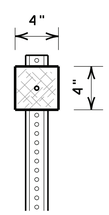 1-Size 2 reflector unit	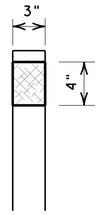 1-Size 1 reflector unit	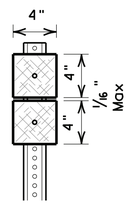 2-Size 2 reflector units	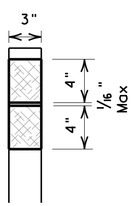 2-Size 1 reflector units
SHEETING	Yellow, White or Red Type B or C Reflective Sheeting			
POST TYPE	WC	FLX	WC	FLX
MOUNT TYPE	GND	GND, SRF	GND	GND, SRF

OBJECT MARKERS

	Type 1 (OM-1)	Type 2 (OM-2)			Type 3 (OM-3)			Type 4 (OM-4)
	OM-1	OM-2X	OM-2Y	OM-2Z	OM-3L	OM-3R	OM-3C	OM-4
DEVICE	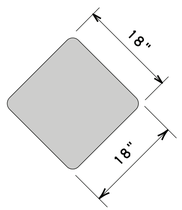	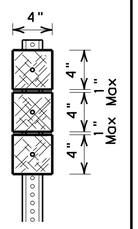 3-Size 2 reflector units	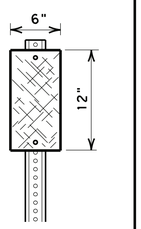 1-Size 3 reflector unit	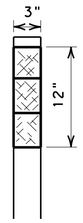 3-Size 1 reflector units or 1-Size 4 reflector unit	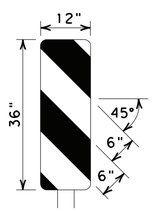	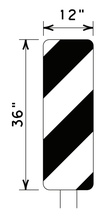	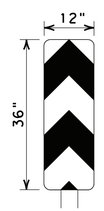	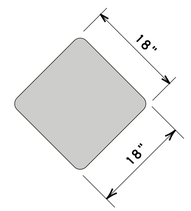
SHEETING	Yellow-Type B_{FL} or C_{FL} Sheeting	Yellow - Type B or C Sheeting			Alternating acrylic black and retroflective yellow - Type B_{FL} or C_{FL} Sheeting			Red -Type B_{FL} or C_{FL} Sheeting
POST TYPE	TWT	WC	WC	FLX	TWT			TWT
MOUNT TYPE	WAS, WAP	GND	GND	GND, SRF	WAS, WAP			WAS, WAP

BARRIER REFLECTORS (BRF)

	GF1	GF2	CTB
DEVICE	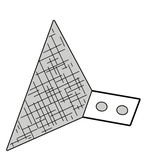	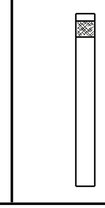	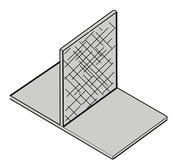
	1. Barrier reflectors shall meet the requirements of DMS 8600. 2. Approved Barrier Reflectors are listed on the "Barrier Reflectors" Material Producer List at: www.txdot.gov.		
SHEETING	Yellow, White, Red		
NOTE	1. Minimum 9 square inches of reflective sheeting surface area.		

CHEVRONS

DEVICE	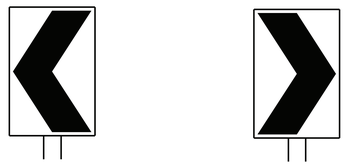 W1-8			
SIZE (W x L)	18"x 24" (Conventional)	24"x 30" (Conventional Oversize)	30"x 36" (Expressway)	36" x 48" (Freeway)
MOUNTING HEIGHT	4'-0" or 7'-0"		7'-0" Only	
NOTE	1. CHEVRON (W1-8) signs and ONE DIRECTION LARGE ARROW (W1-6) Signs shall be installed per Sign Mounting Details (SMD) Standard Sheets and paid under Item 644 (Small Roadside Sign Assemblies). 2. The Texas version of the ONE DIRECTION LARGE ARROW sign (W1-9T) may be used instead of the ONE DIRECTIONAL LARGE ARROW (W1-6).			

ONE DIRECTION LARGE ARROW

DEVICE	 W1-6	
SIZE (W x L)	48" x 24" (Conventional)	60" x 30" (Expressway & Freeway)
MOUNTING HEIGHT	7'-0"	

D & OM DESCRIPTIVE CODES

INSTL DEL ASSM (D-XX) SZ X (XXX) XXX (XX)

NUMBER OF REFLECTORS
S = Single
D = Double

COLOR OF REFLECTORS
W = White
Y = Yellow
R = Red

REFLECTOR UNIT SIZE
1 or 2

TYPE OF POST OR DELINEATOR
WC = Wing Channel Post
FLX = Flexible Post
BRF = Barrier Reflector

TYPE OF MOUNT
GND = Embedded (drivable or set in concrete)
CTB = Concrete Barrier Mount
GF1 or GF2 = Guard Fence Attachment
SRF = Surface Mount

DIRECTION
If Required
BI = Bi-Directional
BR = Bi-Directional with red on back

INSTL OM ASSM (OM-XX) (XXX) XXX (XX)

TYPE OF OBJECT MARKER
1, 2, 3, or 4

NUMBER OF REFLECTORS OR DIRECTION
X = 3-Size 2 reflector units (Type 2 only)
Y = 1-Size 3 reflector unit (Type 2 only)
Z = 3-Size 1 or 1-Size 4 reflector unit(s) (Type 2 only)
L = Left Side (Type 3 Object Marker only)
R = Right Side (Type 3 Object Marker only)
C = Center (Type 3 Object Marker only)

TYPE OF POST
WC = Wing Channel Post
FLX = Flexible Post
TWT = Thin Walled Tubing

TYPE OF MOUNT
GND = Embedded (drivable)
SRF = Surface Mount
WAS = Wedge Anchor Steel
WAP = Wedge Anchor Plastic

DIRECTION
If Required
BI = Bi-Directional

DEPARTMENTAL MATERIAL SPECIFICATIONS

FLEXIBLE DELINEATOR & OBJECT MARKER POSTS (EMBEDDED & SURFACE MOUNT TYPES)	DMS-4400
SIGN FACE MATERIALS	DMS-8300
DELINEATORS, OBJECT MARKERS AND BARRIER REFLECTORS	DMS-8600

NOTE:
Delineator and object marker backplates and sign substrates shall be 0.080" Aluminum sign blank to conform to ASTM B-209 Alloy 6061-T6 or approved alternative.

Texas Department of Transportation

Traffic Operations Division Standard

DELINEATOR & OBJECT MARKER MATERIAL DESCRIPTION

D & OM(1)-15

FILE: dom1-15.dgn	DN: TXDOT	CK: TXDOT	DW: TXDOT	CK: TXDOT
©TxDOT August 2004	CONT	SECT	JOB	HIGHWAY
REVISIONS				
10-09 3-15	DIST	COUNTY		SHEET NO.
4-10				

DISCLAIMER:
The use of this standard is governed by the "Texas Engineering Practice Act". No warranty of any kind is made by TxDOT for any purpose whatsoever. TxDOT assumes no responsibility for the conversion of this standard to other formats or for incorrect results or damages resulting from its use.

DATE:
FILE:

USE OF WARNING DEVICES AT CURVES WITH ADVISORY SPEED LIMITS

Amount by which Advisory Speed Is less than Posted Speed	Warning Devices Needed
5 MPH & 10 MPH	RPMs
15 MPH & 20 MPH	RPMs, and Delineators or RPMs and ONE DIRECTION LARGE ARROW (W1-6) or (W1-9T) sign
25 MPH & Greater	RPMs and Chevrons

SUGGESTED SPACING FOR DELINEATORS ON HORIZONTAL CURVES

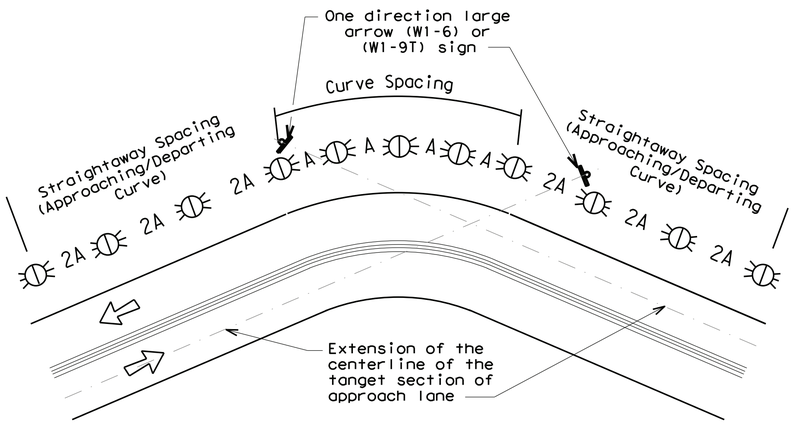

Curves less than 1 degree do not normally require delineators.

NOTE

ONE DIRECTIONAL LARGE ARROW (W1-6) or(W1-9T) sign should be located at approximately and perpendicular to the extension of the centerline of the tangent section of approach lane.

SUGGESTED SPACING FOR CHEVRONS ON HORIZONTAL CURVES

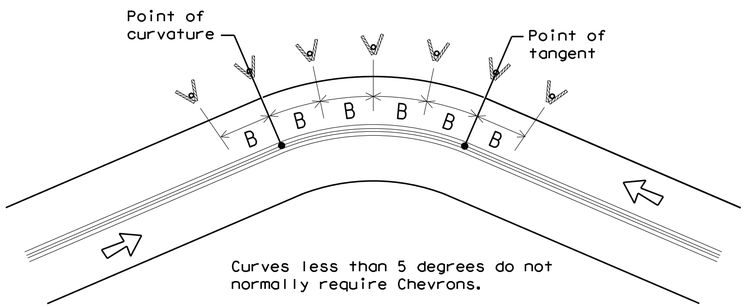

Curves less than 5 degrees do not normally require Chevrons.

DELINEATOR AND CHEVRON SPACING

WHEN DEGREE OF CURVE OR RADIUS IS KNOWN

Degree of Curve	FEET			
	Radius of Curve	Spacing in Curve	Spacing in Straightaway	Chevron Spacing in Curve
		A	2A	B
1	5730	225	450	—
2	2865	160	320	—
3	1910	130	260	200
4	1433	110	220	160
5	1146	100	200	160
6	955	90	180	160
7	819	85	170	160
8	716	75	150	160
9	637	75	150	120
10	573	70	140	120
11	521	65	130	120
12	478	60	120	120
13	441	60	120	120
14	409	55	110	80
15	382	55	110	80
16	358	55	110	80
19	302	50	100	80
23	249	40	80	80
29	198	35	70	40
38	151	30	60	40
57	101	20	40	40

Curve delineator approach and departure spacing should include 3 delineators spaced at 2A. This spacing should be used during design preparation or when the degree of curve is known.

DELINEATOR AND CHEVRON SPACING

WHEN DEGREE OF CURVE OR RADIUS IS NOT KNOWN

Advisory Speed (MPH)	Spacing in Curve	Spacing in Straightaway	Chevron Spacing in Curve
	A	2xA	B
65	130	260	200
60	110	220	160
55	100	200	160
50	85	170	160
45	75	150	120
40	70	140	120
35	60	120	120
30	55	110	80
25	50	100	80
20	40	80	80
15	35	70	40

If the degree of curve is not known, delineator spacing may be determined based on the Advisory Speed of the curve. Use the delineator curve spacing for each Advisory Speed (MPH).

DELINEATOR AND OBJECT MARKER APPLICATION AND SPACING

CONDITION	REQUIRED TREATMENT	MINIMUM SPACING
Frwy./Exp. Tangent	RPMs	See PM-series and FPM-series standard sheets
Frwy./Exp. Curve[1]	Single delineators on right side	See delineator spacing table
FRWY/EXP. Ramp	Single delineators on at least one side of ramp (should be on outside of curves) (see Detail 4 on D&OM(4))	100 feet on ramp tangents. Use delineator spacing table for ramp curves ("straightway spacing" does not apply to ramp curves).
Acceleration/Deceleration Lane	Double delineators (see Detail 4 on D&OM(4))	100 feet (See Detail 4 on D & OM (4))
Truck Escape Ramp	Single red delineators on both sides	50 feet
Bridge Rail (steel or concrete)and Metal Beam Guard Fence	Bi-Directional Delineators when undivided with one lane each direction Single Delineators when multiple lanes each direction	Equal spacing (100'max) but not less than 3 delineators
Other Longitudinal Barriers less than 2 feet from travel lane	Single delineators or barrier reflectors. Bi-directional delineators/barrier reflectors may be required on a median barrier depending on distance to the travel lanes.	100 feet (minimum of 3 delineators). Spacing may be increased to 250 feet on continuous concrete barrier.
Guard Rail Terminus/Impact Head	Divided highway - Object marker on approach end. Undivided 2-lane highways - Object marker on approach and departure end.	Requires Type 3 Object Marker or reflective sheeting provided by manufacturer per D & OM(VIA).
Bridges with no Approach Rail	Type 3 Object Marker at end of rail and 3 single delineators approaching rail.	See Detail 2 on D & OM(4)
Reduced Width Approaches to Bridge Rail	Type 2 Object Markers and 3 single delineators approaching bridge.	See Detail 1 on D & OM(4)
Culverts without MBGF	Type 2 Object Markers	See Detail 3 on D & OM(4)
Crossovers	Double yellow delineators or RPM's	See Detail 5 on D & OM (4)
Pavement Narrowing (lane merge) on Freeways/Expressway	Single delineators adjacent to affected lane for full length of transition	100 feet

NOTES

1. Delineators not required in urban areas with continuous illumination.
2. Unless indicated otherwise, the delineator or barrier reflector color shall conform to the color of the pavement edge line on the side of the road where the delineators or barrier reflectors are placed.
3. Barrier reflectors may be used to replace required delineators.
4. Single red delineators may be mounted on the back side of delineator posts for wrong way driver applications

LEGEND	
	Bi-directional Delineator
	Delineator
	Sign

Texas Department of Transportation

Traffic Operations Division Standard

DELINEATOR & OBJECT MARKER PLACEMENT DETAILS

D & OM(3)-15A

FILE: dom3-15A.dgn	DN: TXDOT	CK: TXDOT	DW: TXDOT	CK: TXDOT
© TxDOT August 2004	CONT	SECT	JOB	HIGHWAY
REVISIONS				
3-15	DIST	COUNTY		SHEET NO.

DISCLAIMER:
The use of this standard is governed by the "Texas Engineering Practice Act". No warranty of any kind is made by TxDOT for any purpose whatsoever. TxDOT assumes no responsibility for the conversion of this standard to other formats or for incorrect results or damages resulting from its use.

SIGN SUPPORT DESCRIPTIVE CODES

(Descriptive Codes correspond to project estimate and quantities sheets)

SM RD SGN ASSM TY XXXXX(X)XX(X-XXXX)

Post Type

FRP = Fiberglass Reinforced Plastic Pipe (see SMD(FRP))
TWT = Thin-Walled Tubing (see SMD(TWT))
10BWG = 10 BWG Tubing (see SMD(SLIP-1) to (SLIP-3))
S80 = Schedule 80 Pipe (see SMD(SLIP-1) to (SLIP-3))

Number of Posts (1 or 2)

Anchor Type

UA = Universal Anchor - Concreted (see SMD(FRP) and (TWT))
UB = Universal Anchor - Bolted down (see SMD(FRP) and (TWT))
WS = Wedge Anchor Steel - (see SMD(TWT))
WP = Wedge Anchor Plastic (see SMD(TWT))
SA = Slipbase - Concreted (see SMD(SLIP-1) to (SLIP-3))
SB = Slipbase - Bolted Down (see SMD(SLIP-1) to (SLIP-3))

Sign Mounting Designation

P = Prefab. "Plain" (see SMD(SLIP-1) to (SLIP-3), (TWT), (FRP))
T = Prefab. "T" (see SMD(SLIP-1) to (SLIP-3), (TWT))
U = Prefab. "U" (see SMD(SLIP-1) to (SLIP-3))
IF REQUIRED
1EXT or 2EXT = Number of Extensions (see SMD(SLIP-1) to (SLIP-3), (TWT))
BM = Extruded Wind Beam (see SMD(SLIP-1) to (SLIP-3))
WC = 1.12 #/ft Wing Channel (see SMD(SLIP-1) to (SLIP-3))
EXAL = Extruded Aluminum Sign Panels (see SMD(SLIP-1))

REQUIRED CLEARANCE FOR BREAKAWAY SUPPORT

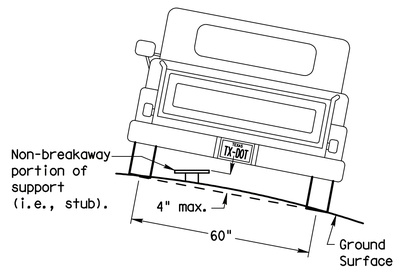

To avoid vehicle undercarriage snagging, any substantial remains of a breakaway support, when it is broken away, should not project more than 4 inches above a 60-inch chord (i.e., typical space between wheel paths).

SIGN LOCATION

PAVED SHOULDERS

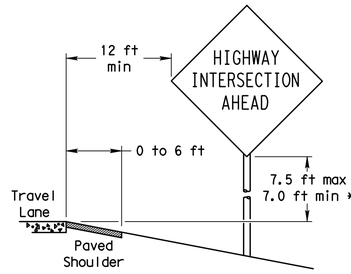

LESS THAN 6 FT. WIDE

When the shoulder is 6 ft. or less in width, the sign must be placed at least 12 ft. from the edge of the travel lane.

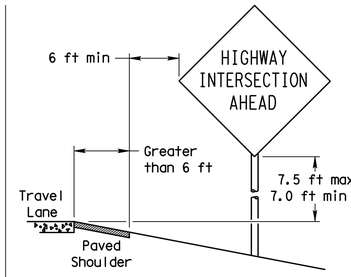

GREATER THAN 6 FT. WIDE

When the shoulder is greater than 6 ft in width, the sign must be placed at least 6 ft. from the edge of the shoulder.

T-INTERSECTION

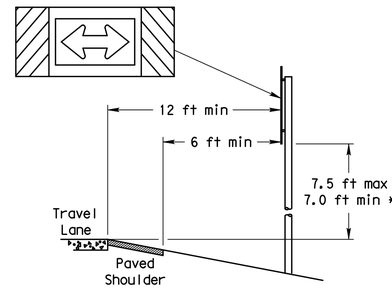

When this sign is needed at the end of a two-lane, two way roadway, the right edge of the sign should be in line with the centerline of the roadway. Place as close to ROW as practical.

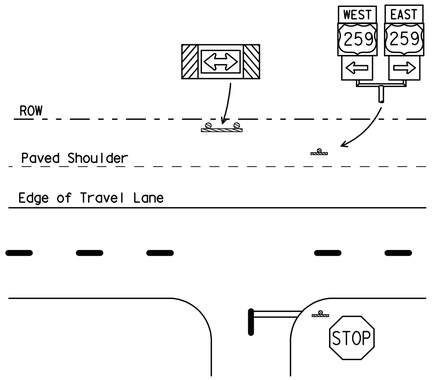

BEHIND BARRIER

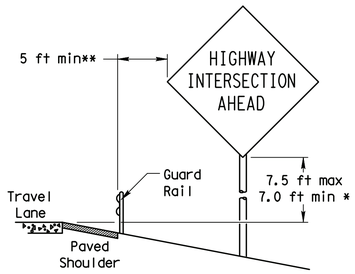

BEHIND GUARDRAIL

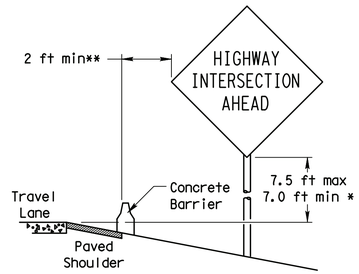

BEHIND CONCRETE BARRIER

**Sign clearance based on distance required for proper guard rail or concrete barrier performance.

* Signs shall be mounted using the following condition that results in the greatest sign elevation:

(1) a minimum of 7 to a maximum of 7.5 feet above the edge of the travel lane or

(2) a minimum of 7 to a maximum of 7.5 feet above the grade at the base of the support when sign is installed on the backslope.

The maximum values may be increased when directed by the Engineer.

See the Traffic Operations Division website for detailed drawings of sign clamps, Triangular Slipbase System components and Wedge Anchor System components.

The website address is:
http://www.txdot.gov/publications/traffic.htm

No more than 2 sign posts should be located within a 7 ft. circle.

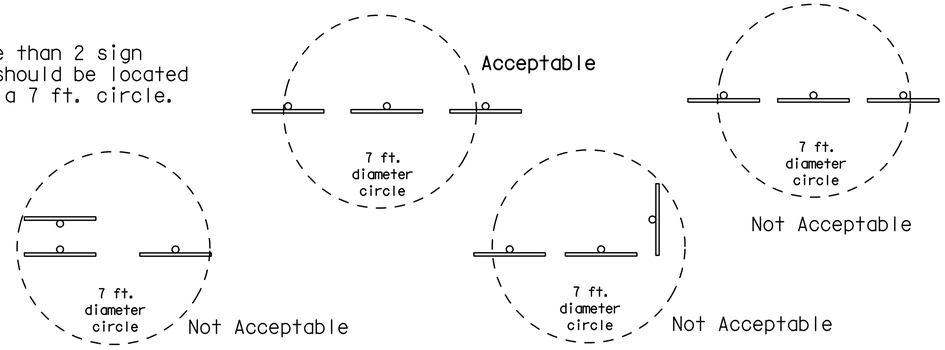

TYPICAL SIGN ATTACHMENT DETAIL

Single Signs

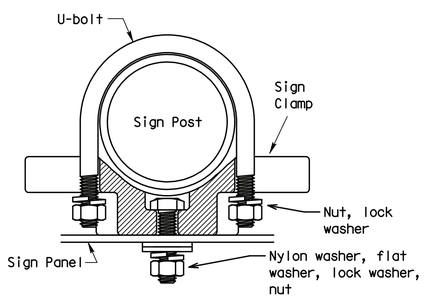

Bolts used to mount sign panels to the clamp are 5/16-18 UNC galvanized square head with nut, nylon washer, flat washer and lock washer. The bolt length is 1 inch for aluminum.

When two sign clamps are used to mount signs back-to-back, use a 5/16-18 UNC galvanized hex head per ASTM A307 with nut and helical-spring lock washer. The approximate bolt lengths for various post sizes and sign clamp types are given in the table at right. The bolt length may need to be adjusted depending upon field conditions.

Sign clamps may be either the specific size clamp or the universal clamp.

Back-to-Back Signs

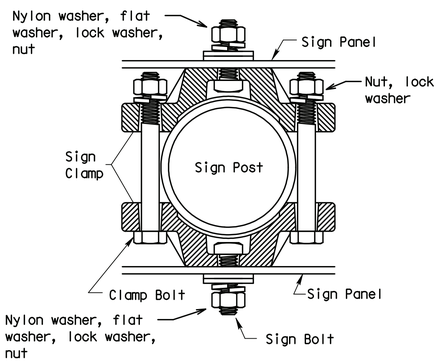

Pipe Diameter	Approximate Bolt Length	
	Specific Clamp	Universal Clamp
2" nominal	3"	3 or 3 1/2"
2 1/2" nominal	3 or 3 1/2"	3 1/2 or 4"
3" nominal	3 1/2 or 4"	4 1/2"

SIGNS WITH PLAQUES

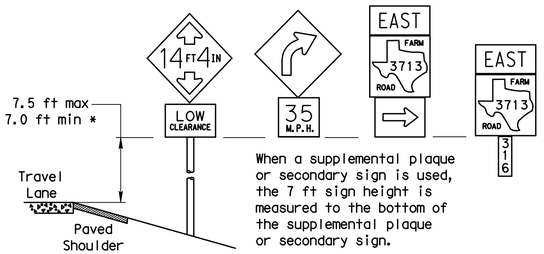

When a supplemental plaque or secondary sign is used, the 7 ft sign height is measured to the bottom of the supplemental plaque or secondary sign.

CURB & GUTTER OR RAISED ISLAND

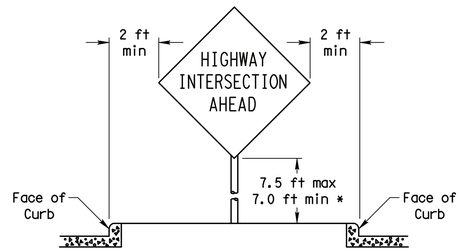

RESTRICTED RIGHT-OF-WAY

(When 6 ft min. is not possible.)

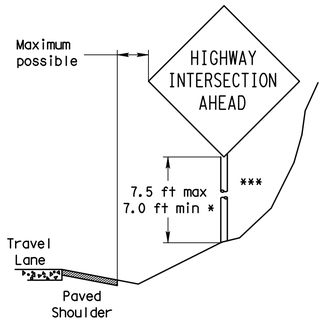

Right-of-way restrictions may be created by rocks, water, vegetation, forest, buildings, a narrow island, or other factors.

In situations where a lateral restriction prevents the minimum horizontal clearance from the edge of the travel lane, signs should be placed as far from the travel lane as practical.

*** Post may be shorter if protected by guardrail or if Engineer determines the post could not be hit due to extreme slope.

Texas Department of Transportation
Traffic Operations Division

SIGN MOUNTING DETAILS SMALL ROADSIDE SIGNS GENERAL NOTES & DETAILS

SMD(GEN)-08

©TxDOT July 2002

REVISIONS	DN: TXDOT	CK: TXDOT	DW: TXDOT	CK: TXDOT
9-08	CONT	SECT	JOB	HIGHWAY
	DIST	COUNTY		SHEET NO.

DATE:
FILE:

DISCLAIMER: The use of this standard is governed by the "Texas Engineering Practice Act". No warranty of any kind is made by TxDOT for any purpose whatsoever. TxDOT assumes no responsibility for the conversion of this standard to other formats or for incorrect results or damages resulting from its use.

DATE:
FILE:

TRIANGULAR SLIPBASE INSTALLATION GENERAL REQUIREMENTS

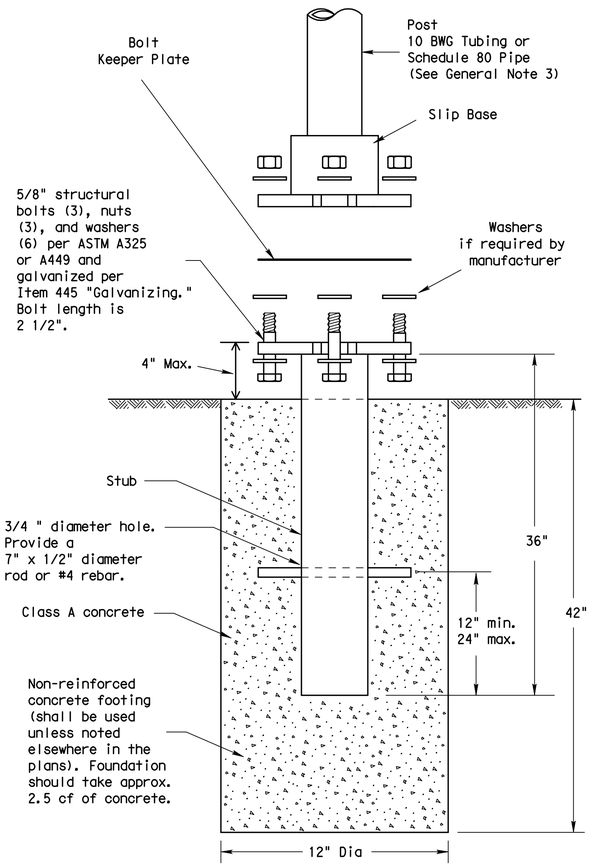

SM RD SGN ASSM TY XXXXX(X)SA(X-XXXX)

NOTE

There are various devices approved for the Triangular Slipbase System. Please reference the Material Producer List for approved slip base systems. http://www.txdot.gov/business/producer_list.htm The devices shall be installed per manufacturers' recommendations. Installation procedures shall be provided to the Engineer by Contractor.

GENERAL NOTES:

1. Slip base shall be permanently marked to indicate manufacturer. Method, design, and location of marking are subject to approval of the TxDOT Traffic Standards Engineer.
2. Material used as post with this system shall conform to the following specifications:
   10 BWG Tubing (2.875" outside diameter)
   - 0.134" nominal wall thickness
   - Seamless or electric-resistance welded steel tubing or pipe
   - Steel shall be HSLAS Gr 55 per ASTM A1011 or ASTM A1008
   - Other steels may be used if they meet the following:
     - 55,000 PSI minimum yield strength
     - 70,000 PSI minimum tensile strength
     - 20% minimum elongation in 2"
   - Wall thickness (uncoated) shall be within the range of 0.122" to 0.138"
   - Outside diameter (uncoated) shall be within the range of 2.867" to 2.883"
   - Galvanization per ASTM A123 or ASTM A653 G210. For precoated steel tubing (ASTM A653), recoat tube outside diameter weld seam by metallizing with zinc wire per ASTM B833.

   Schedule 80 Pipe (2.875" outside diameter)
   - 0.276" nominal wall thickness
   - Steel tubing per ASTM A500 Gr C
   - Other seamless or electric-resistance welded steel tubing or pipe with equivalent outside diameter and wall thickness may be used if they meet the following:
     - 46,000 PSI minimum yield strength
     - 62,000 PSI minimum tensile strength
     - 21% minimum elongation in 2"
   - Wall thickness (uncoated) shall be within the range of 0.248" to 0.304"
   - Outside diameter (uncoated) shall be within the range of 2.855" to 2.895"
   - Galvanization per ASTM A123
3. See the Traffic Operations Division website for detailed drawings of sign clamps and Texas Universal Triangular Slipbase System components. The website address is: http://www.txdot.gov/publications/traffic.htm
4. Sign supports shall not be spliced except where shown. Sign support posts shall not be spliced.

ASSEMBLY PROCEDURE

Foundation
1. Prepare 12-inch diameter by 42-inch deep hole. If solid rock is encountered, the depth of the foundation may be reduced such that it is embedded a minimum of 18 inches into the solid rock.
2. The Engineer may permit batches of concrete less than 2 cubic yards to be mixed with a portable, motor-driven concrete mixer. For small placements less than 0.5 cubic yards, hand mixing in a suitable container may be allowed by Engineer. Concrete shall be Class A.
3. Push the pipe end of the slip base stub into the center of the concrete. Rotate the stub back and forth while pushing it down into the concrete to assure good contact between the concrete and stub. Continue to work the stub into the concrete until it is between 2 to 4 inches above the ground.
4. Plumb the stub. Allow a minimum of 4 days to set, unless otherwise directed by the Engineer.
5. The triangular slipbase system is multidirectional and is designed to release when struck from any direction.

Support
1. Cut support so that the bottom of the sign will be 7 to 7.5 feet above the edge of the travelway (i.e., edge of the closest lane) when slip plate is below the edge of pavement or 7 to 7.5 feet above slip plate when the slip plate is above the edge of the travelway. The cut shall be plumb and straight.
2. Attach sign to support using connections shown. When multiple signs are installed on the same support, ensure the minimum clearance between each sign is maintained. See SMD(SLIP-2) for clearances based on sign types.

CONCRETE ANCHOR

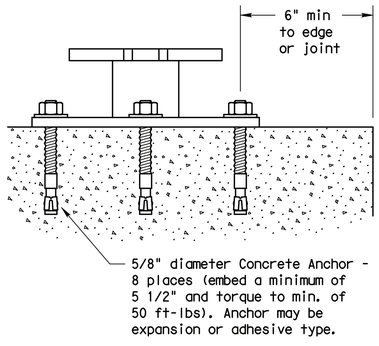

SM RD SGN ASSM TY XXXXX(X)SB(X-XXXX)

Concrete anchor consists of 5/8" diameter stud bolt with UNC series bolt threads on the upper end. Heavy hex nut per ASTM A563, and hardened washer per ASTM F436. The stud bolt shall have a minimum yield and ultimate tensile strength of 50 and 75 KSI, respectively. Nuts, bolts and washers shall be galvanized per Item 445, "Galvanizing." Adhesive type anchors shall have stud bolts installed with Type III epoxy per DMS-6100, "Epoxies and Adhesives." Adhesive anchors may be loaded after adequate epoxy cure time per the manufacturer's recommendations. Top of bolt shall extend at least flush with top of the nut when installed. The anchor, when installed in 4000 psi normal-weight concrete with a 5 1/2" minimum embedment, shall have a minimum allowable tension and shear of 3900 and 3100 psi, respectively.

Texas Department of Transportation
Traffic Operations Division

SIGN MOUNTING DETAILS
SMALL ROADSIDE SIGNS
TRIANGULAR SLIPBASE SYSTEM

SMD(SLIP-1)-08

© TxDOT July 2002

DN: TXDOT	CK: TXDOT	DW: TXDOT	CK: TXDOT
COUNT	SECT	JOB	HIGHWAY
DIST	COUNTY		SHEET NO.

REVISIONS
9-08

DISCLAIMER: The use of this standard is governed by the "Texas Engineering Practice Act". No warranty of any kind is made by TxDOT for any purpose whatsoever. TxDOT assumes no responsibility for the conversion of this standard to other formats or for incorrect results or damages resulting from its use.

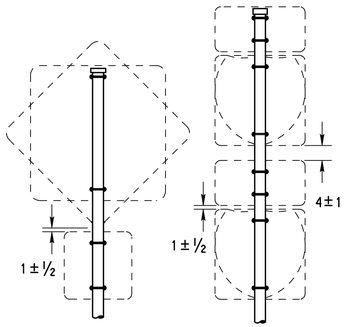

SM RD SGN ASSM TY XXXXX(1)XX(P)

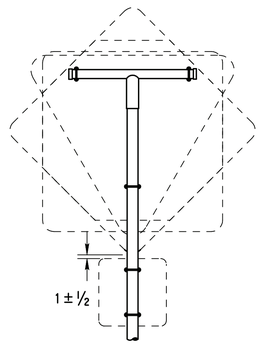

SM RD SGN ASSM TY XXXXX(1)XX(T)

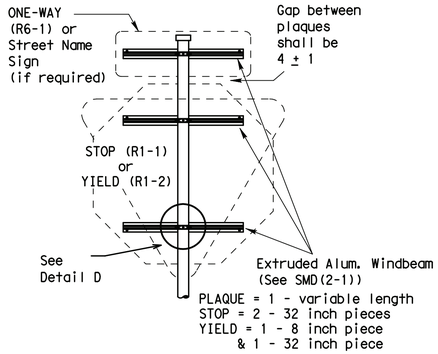

SM RD SGN ASSM TY XXXXX(1)XX(P-BM)

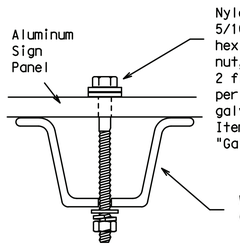

Top View

Detail A

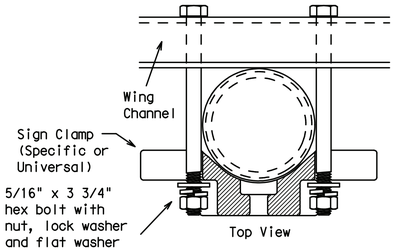

Top View

Detail B

GENERAL NOTES:

1.

SIGN SUPPORT	# OF POSTS	MAX. SIGN AREA
10 BWG	1	16 SF
10 BWG	2	32 SF
Sch 80	1	32 SF
Sch 80	2	64 SF

2. The Engineer may require that a Schedule 80 post be used in place of a 10 BWG where a sign height is abnormally high due to a fill slope.
3. Sign supports shall not be spliced except where shown. Sign support posts shall not be spliced.
4. Aluminum sign blanks shall conform to Departmental Material Specifications DMS-7110 and shall have the following minimum thicknesses: 0.080 for signs less than 7.5 sq. ft., 0.100 for signs 7.5 to 15 sq. ft., and 0.125 for signs greater than 15 sq. ft.
5. Signs that require specific supports due to reasons in addition to windloading are indicated on the "REQUIRED SUPPORT" table on this sheet.
6. For horizontal rectangular signs fabricated from flat aluminum, T-brackets are used for signs 24 inches or less in height. U-brackets are used for signs of greater height.
7. When two triangular slipbase supports are used to support a single sign, they shall not be "rigidly" connected to each other except through the sign panel. This will allow each support to act independently when impacted by an errant vehicle.
8. Wing channel shall meet ASTM A 1011 SS Gr 50 and be galvanized per ASTM A 123.
9. Excess pipe, wing channel, or windbeam shall be cut off so that it does not extend beyond the sign panel (i.e., excess support shall not be visible when the sign is viewed from the front.) Repair galvanized coating at cut support ends per Item 445, "Galvanizing."
10. Additional route markers may be added vertically, provided the total sign area does not exceed the maximum allowable amount per Note 1.
11. Additional sign clamp required on the "T-bracket" post for 24 inch height signs. Place the clamp 3 inches above bottom of sign when possible.
12. Post open ends shall be fitted with Friction Caps.
13. Sign blanks shall be the sizes and shapes shown on the plans.

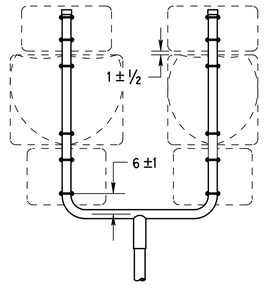

SM RD SGN ASSM TY XXXXX(1)XX(U)

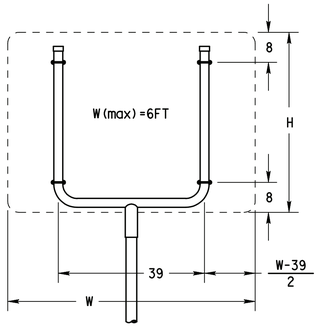

SM RD SGN ASSM TY XXXXX(1)XX(U)

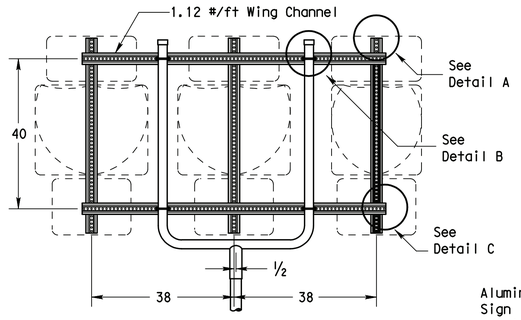

SM RD SGN ASSM TY XXXXX(1)XX(U-WC)
(See Note 11)

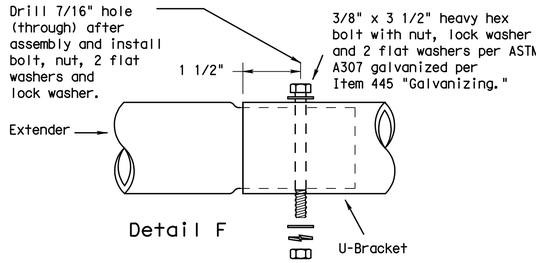

Detail F

Splices shall only be allowed behind the sign substrate.

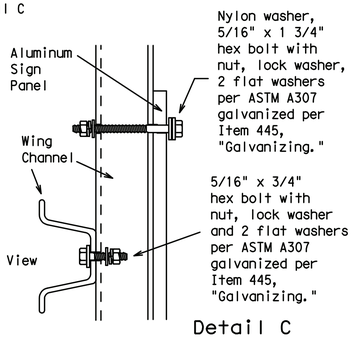

SIDE VIEW

Detail C

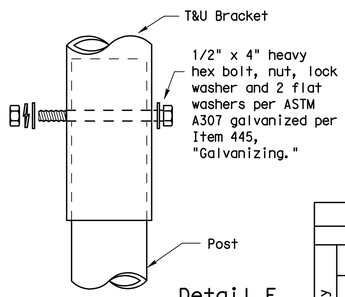

Detail E

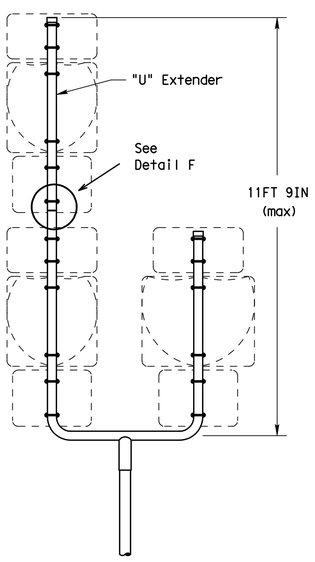

SM RD SGN ASSM TY S80(1)XX(U-1EXT)

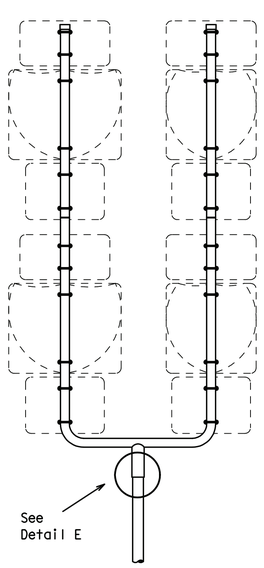

SM RD SGN ASSM TY S80(1)XX(U-2EXT)

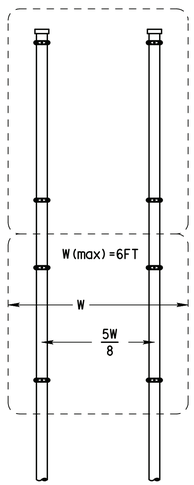

SM RD SGN ASSYM TY XXXXX(2)XX(P)

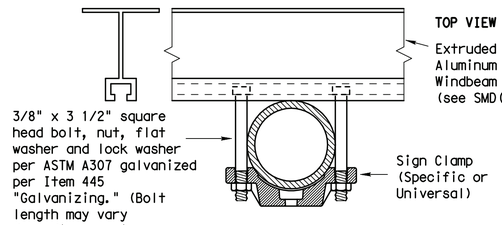

Detail D

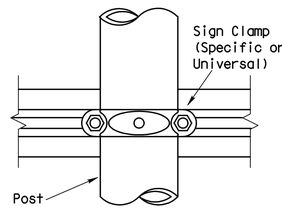

REQUIRED SUPPORT		
	SIGN DESCRIPTION	SUPPORT
Regulatory	48-inch STOP sign (R1-1)	TY 10BWG(1)XX(T) TY 10BWG(1)XX(P-BM)
	60-inch YIELD sign (R1-2)	TY 10BWG(1)XX(T) TY 10BWG(1)XX(P-BM)
	48x16-inch ONE-WAY sign (R6-1)	TY 10BWG(1)XX(T) TY 10BWG(1)XX(P-BM)
	36x48, 48x36, and 48x48-inch signs	TY 10BWG(1)XX(T)
	48x60-inch signs	TY S80(1)XX(T)
Warning	48x48-inch signs (diamond or square)	TY 10BWG(1)XX(T)
	48x60-inch signs	TY S80(1)XX(T)
	48-inch Advance School X-ing sign (S1-1)	TY 10BWG(1)XX(T)
	48-inch School X-ing sign (S2-1)	TY 10BWG(1)XX(T)
	Large Arrow sign (W1-6 & W1-7)	TY 10BWG(1)XX(T)

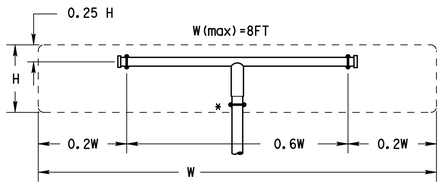

All dimensions are in english unless detailed otherwise.

SM RD SGN ASSM TY XXXXX(1)XX(T)
(* - See Note 12)

FRICTION CAP DETAIL

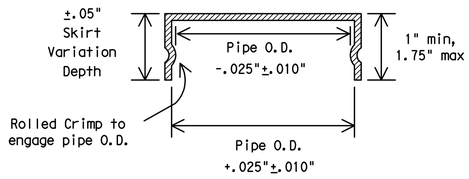

Friction caps may be manufactured from hot rolled or cold rolled steel sheets. The minimum sheet metal thickness shall be 24 gauge for all cap sizes.

The rim edges shall be reasonably straight and smooth. Caps shall be sized and formed in such a manner as to produce a drive-on friction fit and have no tendency to rock when seated on the pipe. The depth shall be sufficient to give positive protection against entrance of rainwater. They shall be free of sharp creases or indentations and show no evidence of metal fracture.

Caps shall have an electrodeposited coating of zinc in accordance with the requirements of ASTM B633 Class FE/ZN 8.

Texas Department of Transportation
Traffic Operations Division

SIGN MOUNTING DETAILS SMALL ROADSIDE SIGNS TRIANGULAR SLIPBASE SYSTEM

SMD(SLIP-2)-08

©TxDOT July 2002

DN: TXDOT	CK: TXDOT	DW: TXDOT	CK: TXDOT
CONT	SECT	JOB	HIGHWAY
DIST	COUNTY		SHEET NO.

9-08 REVISIONS

DATE:
FILE:

DISCLAIMER:
The use of this standard is governed by the "Texas Engineering Practice Act". No warranty of any kind is made by TxDOT for any purpose whatsoever. TxDOT assumes no responsibility for the conversion of this standard to other formats or for incorrect results or damages resulting from its use.

DATE:
FILE:

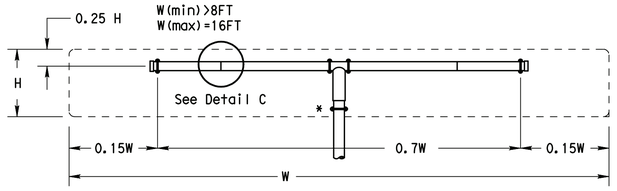

SM RD SGN ASSM TY XXXXX(1)XX(T-2EXT)
(* - See Note 12)

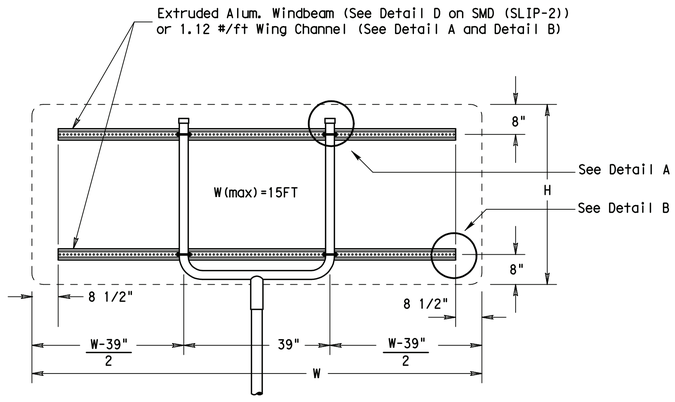

SM RD SGN ASSM TY XXXXX(1)XX(U-XX)

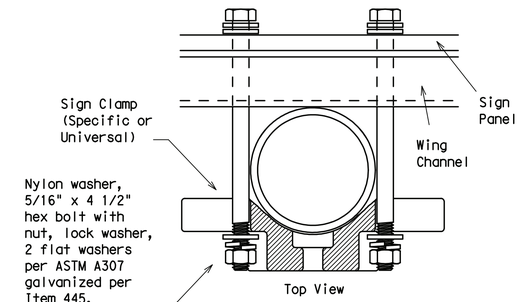

Detail A

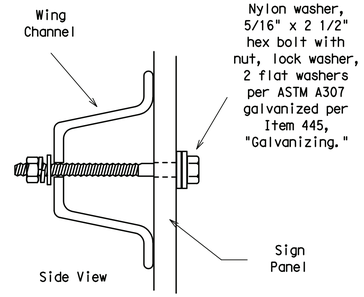

Detail B

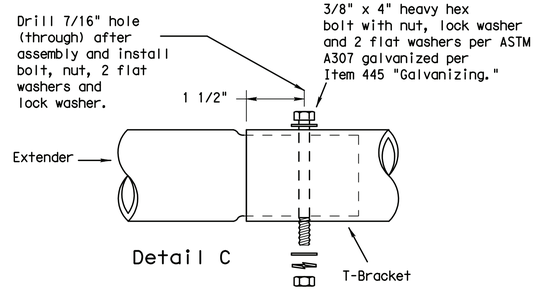

Detail C

Splices shall only be allowed behind the sign substrate.

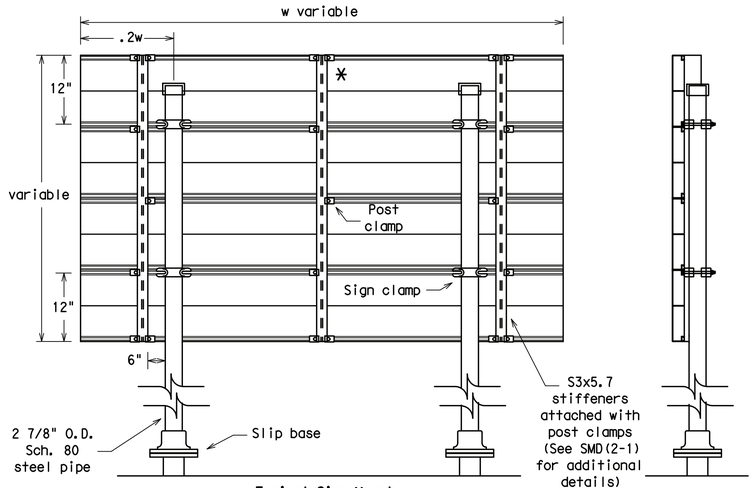

Typical Sign Mount

SM RD SGN ASSM TY S80(2)XX(P-EXAL)

* Additional stiffener placed at approximate center of signs when sign width is greater than 10'.

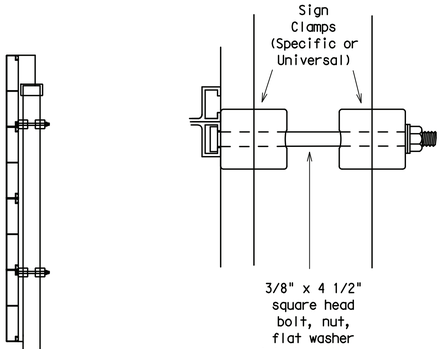

See Detail E
for clamp installation

Detail E

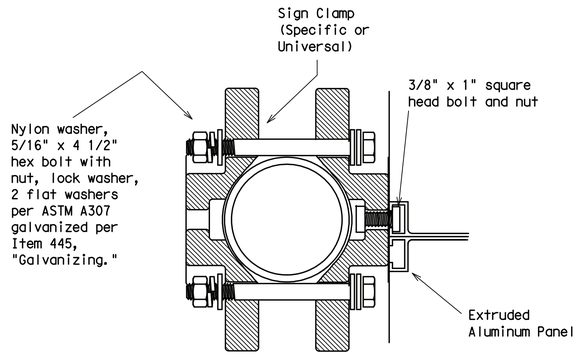

Detail D
EXTRUDED ALUMINUM SIGN WITH T BRACKET

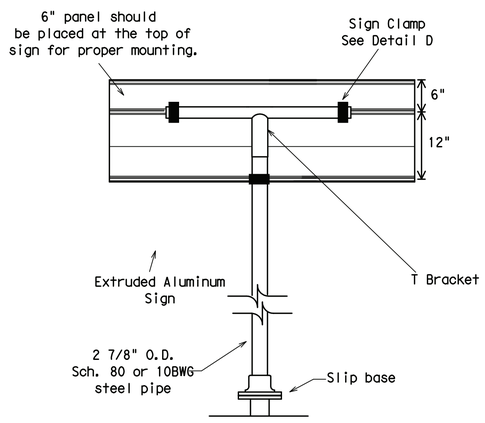

Extruded Aluminum Sign
With T Bracket

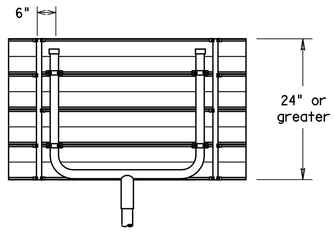

Use Extruded Alum. Windbeam as stiffeners
See SMD (2-1) for additional details

See Detail E
for clamp installation

GENERAL NOTES:

SIGN SUPPORT	# OF POSTS	MAX. SIGN AREA
10 BWG	1	16 SF
10 BWG	2	32 SF
Sch 80	1	32 SF
Sch 80	2	64 SF

2. The Engineer may require that a Schedule 80 post be used in place of a 10 BWG where a sign height is abnormally high due to a fill slope.
3. Sign supports shall not be spliced except where shown. Sign support posts shall not be spliced.
4. Aluminum sign blanks shall conform to Departmental Material Specifications DMS-7110 and shall have the following minimum thicknesses: 0.080 for signs less than 7.5 sq. ft., 0.100 for signs 7.5 to 15 sq. ft., and 0.125 for signs greater than 15 sq. ft.
5. Signs that require specific supports due to reasons in addition to windloading are indicated on the "REQUIRED SUPPORT" table on this sheet.
6. For horizontal rectangular signs fabricated from flat aluminum, T-brackets are used for signs 24 inches or less in height. U-brackets are used for signs of greater height.
7. When two triangular slipbase supports are used to support a single sign, they shall not be "rigidly" connected to each other except through the sign panel. This will allow each support to act independently when impacted by an errant vehicle.
8. Wing channel shall meet ASTM A 1011 SS Gr 50 and be galvanized per ASTM A 123.
9. Excess pipe, wing channel, or windbeam shall be cut off so that it does not extend beyond the sign panel (i.e., excess support shall not be visible when the sign is viewed from the front.) Repair galvanized coating at cut support ends per Item 445, "Galvanizing."
10. Sign blanks shall be the sizes and shapes shown on the plans.
11. Additional sign clamp required on the "T-bracket" post for 24 inch high signs. Place the clamp 3 inches above bottom of sign when possible.
12. Post open ends shall be fitted with Friction Caps.

REQUIRED SUPPORT		
	SIGN DESCRIPTION	SUPPORT
Regulatory	48-inch STOP sign (R1-1)	TY 10BWG(1)XX(T) TY 10BWG(1)XX(P-BM)
	60-inch YIELD sign (R1-2)	TY 10BWG(1)XX(T) TY 10BWG(1)XX(P-BM)
	48x16-inch ONE-WAY sign (R6-1)	TY 10BWG(1)XX(T) TY 10BWG(1)XX(P-BM)
	36x48, 48x36, and 48x48-inch signs	TY 10BWG(1)XX(T)
	48x60-inch signs	TY S80(1)XX(T)
Warning	48x48-inch signs (diamond or square)	TY 10BWG(1)XX(T)
	48x60-inch signs	TY S80(1)XX(T)
	48-inch Advance School X-ing sign (S1-1)	TY 10BWG(1)XX(T)
	48-inch School X-ing sign (S2-1)	TY 10BWG(1)XX(T)
	Large Arrow sign (W1-6 & W1-7)	TY 10BWG(1)XX(T)

Texas Department of Transportation
Traffic Operations Division

SIGN MOUNTING DETAILS
SMALL ROADSIDE SIGNS
TRIANGULAR SLIPBASE SYSTEM

SMD(SLIP-3)-08

© TxDOT July 2002

DN: TXDOT	CK: TXDOT	DW: TXDOT	CK: TXDOT
COUNT	SECT	JOB	HIGHWAY
DIST	COUNTY		SHEET NO.

9-08 REVISIONS

DISCLAIMER:
The use of this standard is governed by the "Texas Engineering Practice Act". No warranty of any kind is made by TxDOT for any purpose whatsoever. TxDOT assumes no responsibility for the conversion of this standard to other formats or for incorrect results or damages resulting from its use.

REQUIREMENTS FOR RED BACKGROUND REGULATORY SIGNS
(STOP, YIELD, DO NOT ENTER AND WRONG WAY SIGNS)

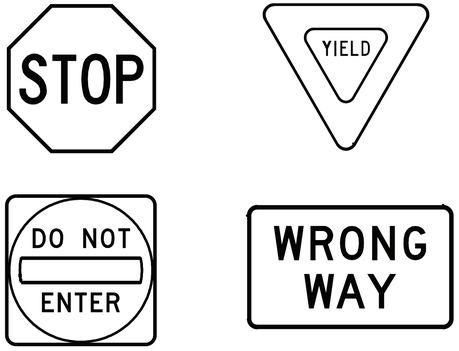

REQUIREMENTS FOR FOUR SPECIFIC SIGNS ONLY

SHEETING REQUIREMENTS		
USAGE	COLOR	SIGN FACE MATERIAL
BACKGROUND	RED	TYPE B OR C SHEETING
BACKGROUND	WHITE	TYPE B OR C SHEETING
LEGEND & BORDERS	WHITE	TYPE B OR C SHEETING
LEGEND	RED	TYPE B OR C SHEETING

REQUIREMENTS FOR WHITE BACKGROUND REGULATORY SIGNS
(EXCLUDING STOP, YIELD, DO NOT ENTER AND WRONG WAY SIGNS)



TYPICAL EXAMPLES

SHEETING REQUIREMENTS		
USAGE	COLOR	SIGN FACE MATERIAL
BACKGROUND	WHITE	TYPE A SHEETING
BACKGROUND	ALL OTHERS	TYPE B OR C SHEETING
LEGEND, BORDERS AND SYMBOLS	BLACK	ACRYLIC NON-REFLECTIVE FILM
LEGEND, BORDERS AND SYMBOLS	ALL OTHER	TYPE B OR C SHEETING

REQUIREMENTS FOR WARNING SIGNS

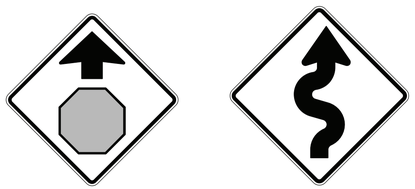

TYPICAL EXAMPLES

SHEETING REQUIREMENTS		
USAGE	COLOR	SIGN FACE MATERIAL
BACKGROUND	FLOURESCENT YELLOW	TYPE B_{FL} OR C_{FL} SHEETING
LEGEND & BORDERS	BLACK	ACRYLIC NON-REFLECTIVE FILM
LEGEND & SYMBOLS	ALL OTHER	TYPE B OR C SHEETING

REQUIREMENTS FOR SCHOOL SIGNS



TYPICAL EXAMPLES

SHEETING REQUIREMENTS		
USAGE	COLOR	SIGN FACE MATERIAL
BACKGROUND	WHITE	TYPE A SHEETING
BACKGROUND	FLOURESCENT YELLOW GREEN	TYPE B_{FL} OR C_{FL} SHEETING
LEGEND, BORDERS AND SYMBOLS	BLACK	ACRYLIC NON-REFLECTIVE FILM
SYMBOLS	RED	TYPE B OR C SHEETING

GENERAL NOTES

1. Signs to be furnished shall be as detailed elsewhere in the plans and/or as shown on sign tabulation sheet. Standard sign designs and arrow dimensions can be found in the "Standard Highway Sign Designs for Texas" (SHSD).
2. Sign legend shall use the Federal Highway Administration (FHWA) Standard Highway Alphabets (B, C, D, E, Emod or F).
3. Lateral spacing between letters and numerals shall conform with the SHSD, and any approved changes thereto. Lateral spacing of legend shall provide a balanced appearance when spacing is not shown.
4. Black legend and borders shall be applied by screening process or cut-out acrylic non-reflective black film to background sheeting, or combination thereof.
5. White legend and borders shall be applied by screening process with transparent colored ink, transparent colored overlay film to white background sheeting or cut-out white sheeting to colored background sheeting, or combination thereof.
6. Colored legend shall be applied by screening process with transparent colored ink, transparent colored overlay film or colored sheeting to background sheeting, or combination thereof.
7. Sign substrate shall be any material that meets the Departmental Material Specification requirements of DMS-7110 or approved alternative.
8. Mounting details for roadside mounted signs are shown in the "SMD series" Standard Plan Sheets.

ALUMINUM SIGN BLANKS THICKNESS	
Square Feet	Minimum Thickness
Less than 7.5	0.080
7.5 to 15	0.100
Greater than 15	0.125

DEPARTMENTAL MATERIAL SPECIFICATIONS	
ALUMINUM SIGN BLANKS	DMS-7110
SIGN FACE MATERIALS	DMS-8300

The Standard Highway Sign Designs for Texas (SHSD) can be found at the following website.

http://www.txdot.gov/

Texas Department of Transportation

Traffic Operations Division Standard

TYPICAL SIGN REQUIREMENTS

TSR(4)-13

FILE: tsr4-13.dgn	DN: TxDOT	CK: TxDOT	DW: TxDOT	CK: TxDOT
©TxDOT October 2003	CONT	SECT	JOB	HIGHWAY
REVISIONS				
12-03 7-13	DIST	COUNTY		SHEET NO.
9-08				

DATE:
FILE:

DISCLAIMER:
The use of this standard is governed by the "Texas Engineering Practice Act". No warranty of any kind is made by TxDOT for any purpose whatsoever. TxDOT assumes no responsibility for the conversion of this standard to other formats or for incorrect results or damages resulting from its use.

DATE:
FILE:

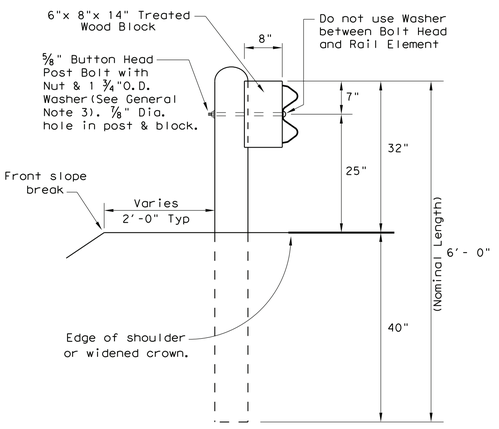

TYPICAL POST

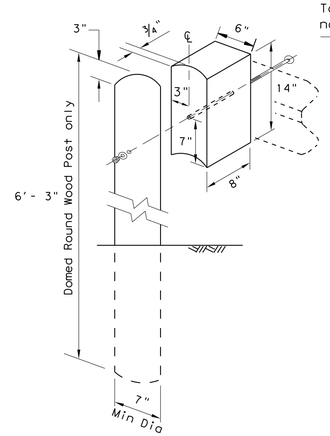

WOOD BLOCK TO ROUND WOOD POST

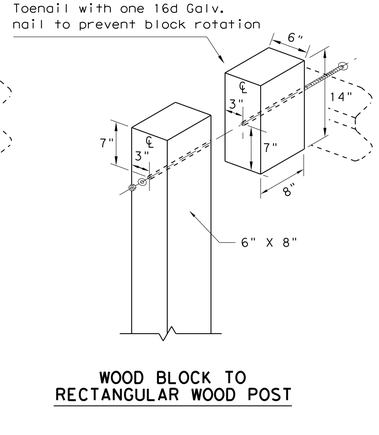

WOOD BLOCK TO RECTANGULAR WOOD POST

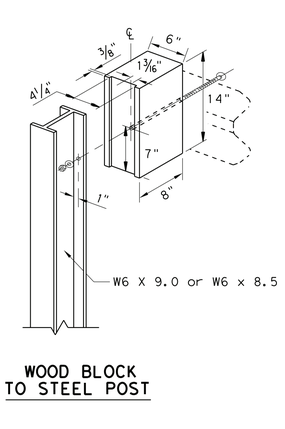

WOOD BLOCK TO STEEL POST

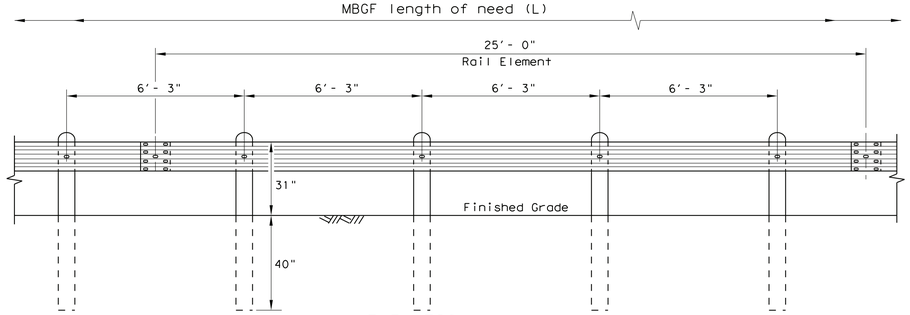

ELEVATION MID-SPAN RAIL SPLICE

Showing a 25'- 0" section of W-Beam rail, 12'- 6" rail sections may also be supplied (See General Note 2)

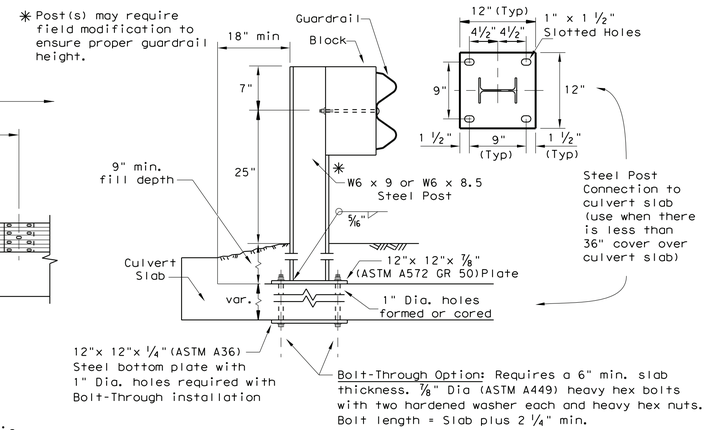

LOW FILL CULVERT POST

Culverts of 25 ft. or less, see GF(31)LS standard for "Long Span" option.

Epoxy Note:
Epoxy Anchor Option: This option may only be used if the culvert slab is 8" min. thick. Threaded anchor rods must be ⅞" Dia. ASTM A449 or A193 Grade B7 with heavy hex nut, and one hardened washer each. Embed anchor rods 6" with Hilti HIT RE 500 epoxy adhesive. Other Type III Class C epoxy adhesives meeting the requirements of DMS-6100, "Epoxies and Adhesives", may be used if it can be demonstrated that they meet or exceed the strength of Hilti HIT RE 500 with the same embedment depth and threaded rod dia. Follow the manufacturer's requirements for installing epoxied threaded rods. Extend rods ¼" min. beyond nut.

GENERAL NOTES

1. The type of post (round wood post, rectangular wood post, or steel post) will be as shown in the plans. The exact position of MBGF shall be shown in the plans or as directed by the Engineer. Steel posts to be galvanized in accordance with Item 445, "Galvanizing."
2. Rail element shall meet the requirements of Item 540,"Metal Beam Guard Fence" except as modified in the plans. The Contractor may furnish rail elements of 25'- 0", or 12'- 6" (nom.) lengths. Rail elements may have slotted holes at 3'-1½" C-C or 6'-3" C-C. A special length of rail may be manufactured to accommodate the downstream anchor terminal (DAT) and the transition sections of guardrail.
3. Button head "post" bolts (ASTM A307) shall be of sufficient length to extend through the full thickness of the nut (ASTM A563) and Type A (1 ¾" O.D.)washer and not more than 1" beyond it. Button head "splice" bolts (ASTM A307) are ⅝" x 1 ¼" (or 2" long at triple rail splices) with a ⅝" double recessed nut (ASTM A563). Thrie beam "connection" ⅞" dia. (ASTM A325) hex bolts shall be of sufficient length to extend through the full thickness of the rail, washers, and nuts.
4. Fittings (bolts, nuts, and washers) shall be galvanized in accordance with Item 445, "Galvanizing." Fittings shall be subsidiary to the bid item.
5. Crown shall be widened to accommodate the Metal Beam Guard Fence.
6. The lateral approach to the guard fence, shall have a maximum slope of 1V:10H.
7. If shown elsewhere in the plans or as directed by the Engineer, the guard fence may be flared at a rate of 25:1 or flatter.
8. Unless otherwise shown in the plans, guard fence placed in the vicinity of curbs shall be positioned so that the face of curb is located directly below or behind the face of the rail. Rail placed over curbs shall be installed so that the post bolt is located approximately 25 inches above the gutter pan or edge of shoulder.
9. If solid rock is encountered within 0 to 18" of the finished grade, drill a 22" dia. hole, or drill two 12" dia. front to back overlapping holes, 24" into the rock. If solid rock is encountered below 18",drill a 12" dia. hole, 12" into the rock or to the standard embedment depth, whichever maybe less. Any excess post length, after meeting these depths, may be field cut to ensure proper guardrail mounting height. Backfill with a cohesionless material.
10. Posts shall not be set in concrete, of any depth.
11. Special fabrication will be required at installations having a curvature of less than 150 ft. radius.
12. Unless otherwise shown in the plans, a composite material post and/or block that meets the requirements of DMS-7210,"Composite Material Posts and Blocks for Metal Beam Guard Fence" may be substituted for posts and/or blocks of similar dimensions. The Construction Division, TxDOT maintains a Material Producer List (MPL) for producers of materials conforming to DMS-7210. Only producers on the MPL may furnish composite material posts and/or blocks.
13. For posts located partially or wholly between precast box culvert units, the use of a cast-in-place concrete closure between boxes is required. See Detail "A" on Bridge Standard SCP-MD.

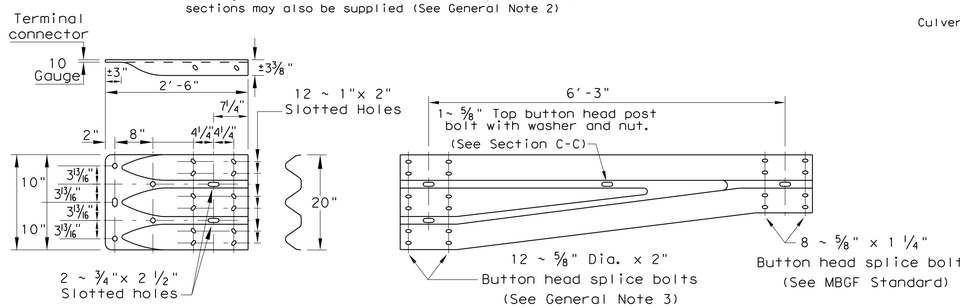

THRIE-BEAM TERMINAL CONNECTION

(See General Notes 3 & 4 for required hardware)

NON-SYMMETRICAL TRANSITION TO W-BEAM (10 Gauge)

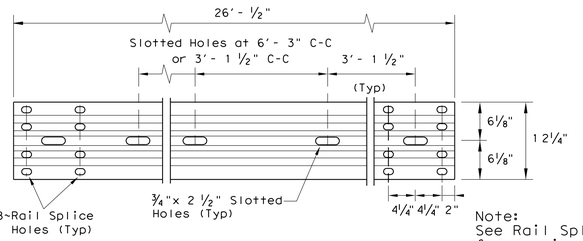

Note:
See Rail Splice Detail for required hardware.

ELEVATION 25'- 0"(NOM.) W-BEAM SECTION

12'- 6" rail sections may also be supplied (See General Note 2)

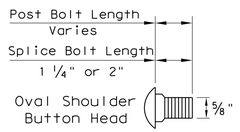

BUTTON HEAD BOLT

Post and Splice Bolts (See General Note 3)

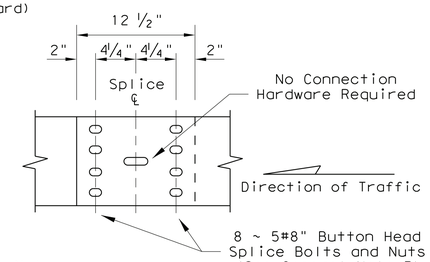

Note:
GF(31), Mid-Span rail splices are required with 6'-3" post spacings.

MID-SPAN RAIL SPLICE DETAIL

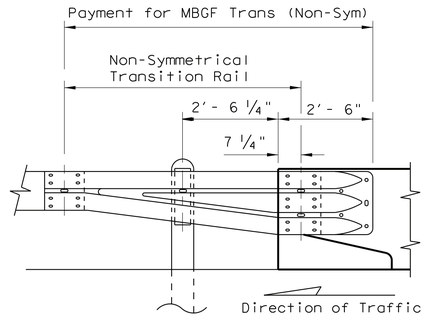

Note:
All rail elements shall be lapped in the direction of adjacent traffic.

DOWNSTREAM RAIL ATTACHMENT

Texas Department of Transportation

Design Division Standard

METAL BEAM GUARD FENCE

GF(31)-14

FILE: gf3114.dgn	DN: TxDOT	CK: AM	DW: VP	CK: CGL
©TxDOT: December 2011	CONT	SECT	JOB	HIGHWAY
REVISIONS				
	DIST	COUNTY		SHEET NO.

DISCLAIMER:
The use of this standard is governed by the "Texas Engineering Practice Act". No warranty of any kind is made by TxDOT for any purpose whatsoever. TxDOT assumes no responsibility for the conversion of this standard to other formats or for incorrect results or damages resulting from its use.

DATE:
FILE:

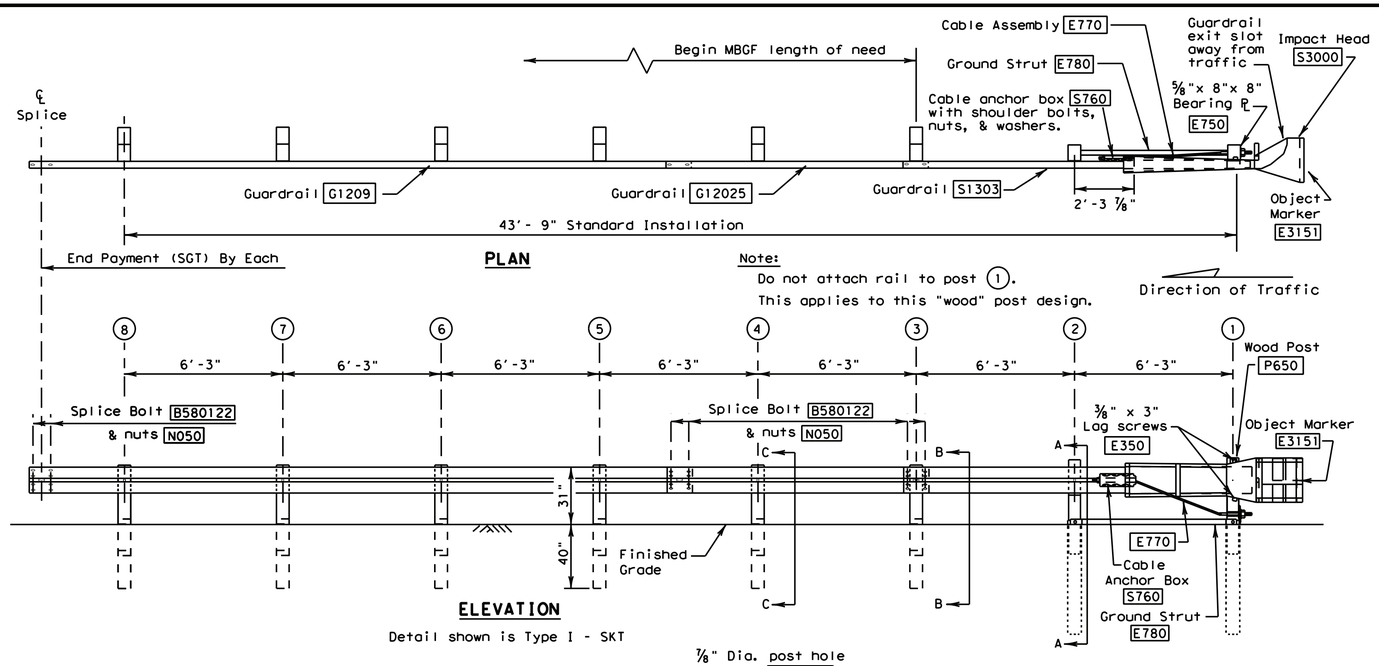

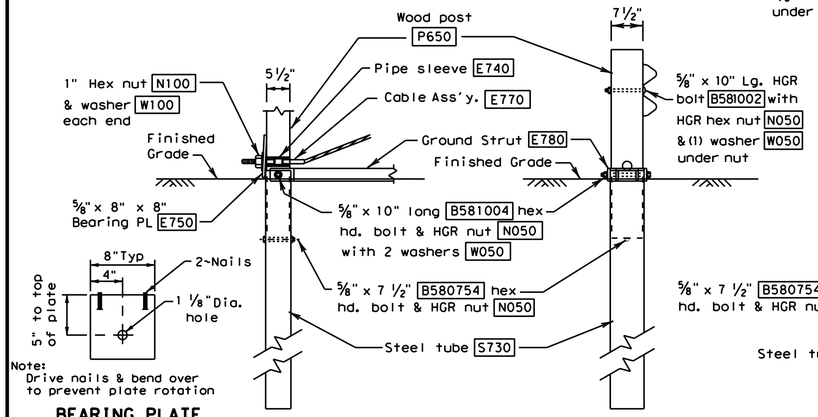

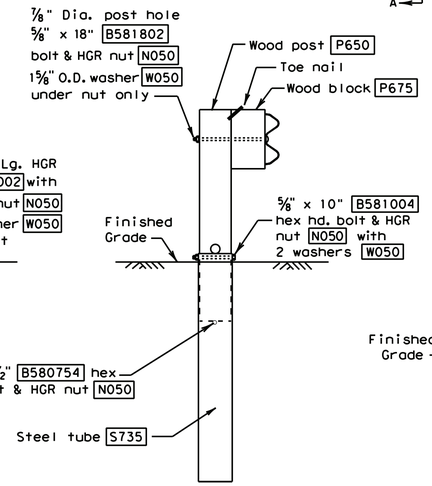

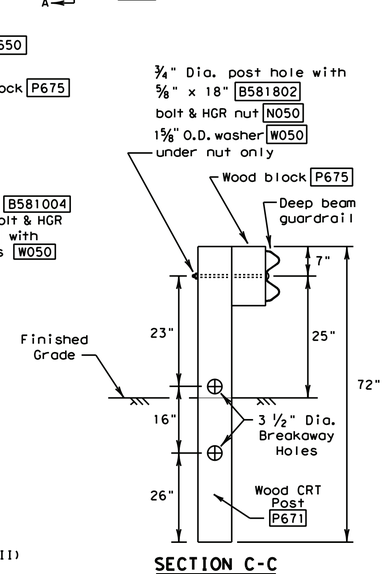

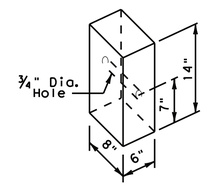

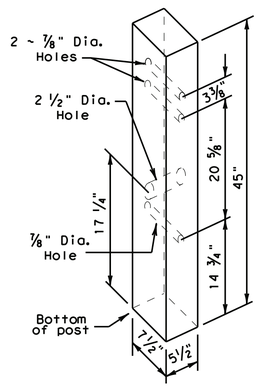

GENERAL NOTES

1. For additional information contact: Interstate Steel Inc. (432) 263-3725
2. The Type of SGT unit will be specified elsewhere in the plans. The numbers in the circles indicate post position. The Type of SGT unit chosen is a maintenance consideration and does not affect the systems performance.

	Post & Tube Options	Post Only
Type I	Posts (1) thru (2)	Posts (3) thru (8)
Type II	Posts (1) thru (4)	Posts (5) thru (8)
Type III	Posts (1) thru (8)	None

3. SGT's placed within the "minimum" 150 ft. radius, shall be installed straight. Standard rail elements may be installed within the radius, without special fabrication.
4. All bolts, nuts cable assemblies, cable anchors, steel tubes & bearing plates shall be galvanized.
5. A flare rate of 25:1 may be used over the first 50 ft. of the system to prevent the terminal head from encroaching the shoulder. The flare may be decreased or eliminated for specific installations, if directed by the Engineer.
6. The steel tubes shall not protrude more than 4 inches above ground. Site grading may be necessary to meet this requirement.
7. The steel tubes may be driven with an approved driving head. They shall not be driven with the wood post in the tube. If the steel tubes are placed in drilled holes, the backfill material must be satisfactorily compacted to prevent tube settlement.
8. If solid rock is encountered. See the Manufacturer's installation manual for the proper installation guidance.
9. The breakaway cable assembly must be taut. A locking device, (vice grips or channel lock pliers) should be used to prevent the cable from twisting when tightening the nuts.
10. The wood blocks shall be "toe nailed" to the rectangular wood posts to prevent them from turning when the wood shrinks. The bearing plate on the front post shall also be "toe nailed" to prevent rotation.
11. For curb installations, the soil tubes and posts shall be installed at the proper ground elevation behind the curb. The posts will then require field drilling new holes to accommodate the rail to post connection bolt to maintain the proper height of the rail above the gutter pan. The excess post length above the rail will be removed if directed by the Engineer.
12. An object marker shall be installed on the front of the impact head as detailed on D&OM(VIA).

Item #	POST & TUBE OPTIONS Type I	Type II	Type III	BILL OF MATERIAL DESCRIPTION
S1303	1	1	1	Guardrail (12 Ga.) 12'- 6" SKT
G12025	1	1	1	Guardrail (12 Ga.) 9'- 4 ½"
G1209	1	1	1	Guardrail (12 Ga.) 25'- 0"
S730	2	2	2	Steel Tube - 6" x 8" x 72" x ⅛" min. or 3/16"
S735	0	2	6	Steel Tube - 6" x 8" x 54" x ⅛" min. or 3/16"
P650	2	4	8	Wood Posts - 5 ½" x 7 ½" x 45"
P671	6	4	0	Wood CRT Posts - 6" x 8" x 72"
P675	6	6	6	Wood Block - 6" x 8" x 14"
E740	1	1	1	Pipe Sleeve - 2" Std. Pipe x 5 ½"
E750	1	1	1	Bearing Plate - ⅝" x 8" x 8"
S760	1	1	1	Cable Anchor Box
E770	1	1	1	Cable Assembly
E780	1	1	1	Ground Strut
S3000	1	1	1	Impact Head
				HARDWARE
B580754	2	4	8	⅝" x 7 ½" Hex Hd. Bolt
B581004	2	4	8	⅝" x 10" Hex Hd. Bolt (Top of Tubes)
W050	11	15	23	⅝" Washers
B581002	1	1	1	⅝" x 10" HGR Post Bolt (Post 2)
B580122	16	16	16	⅝" x 1 ¼" HGR Splice Bolt
B581802	6	6	6	⅝" x 18" HGR Post Bolt (Posts (3) thru (8))
N050	35	39	47	⅝" HGR Nut (24-Spl, Varies-Posts, 2-Strut)
E350	2	2	2	⅜" x 3" Lag Screw
N100	2	2	2	1" Hex Nut (Anchor Cable)
W100	2	2	2	1" Washer (Anchor Cable)
SB12A	8	8	8	Cable Anchor Box Shoulder Bolts
N012A	8	8	8	½" Structural Nut
W012A	8	8	8	½" Structural Washer
E3151	1	1	1	Object Marker - (18" x 18")

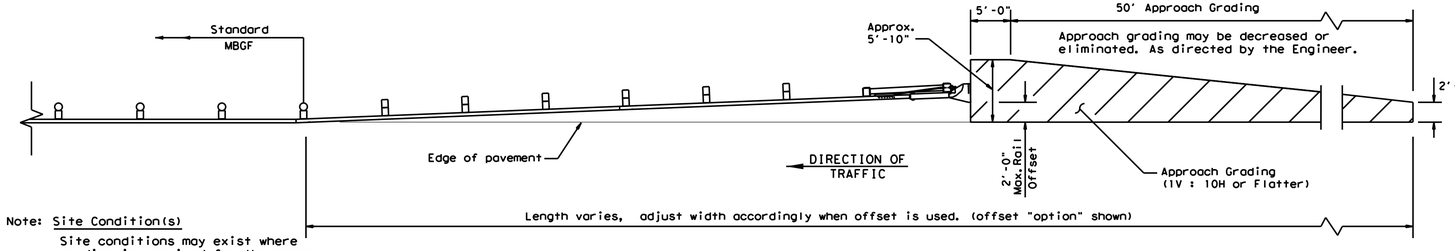

Note: Site Condition(s)
Site conditions may exist where grading is required for the proper installation of metal guard fence and end treatments.

APPROACH GRADING AT GUARDRAIL END TREATMENTS

POST & TUBE OPTIONS	
Type I	post (1) thru (2)
Type II	post (1) thru (4)
Type III	post (1) thru (8)

Texas Department of Transportation — Design Division Standard

SINGLE GUARDRAIL TERMINAL (SKT-31) (WOOD POST)

SGT(8)31-14

FILE: sgt83114.dgn	DN: TxDOT	CK: AM	DW: BD/VP	CK: VP
©TxDOT December 2011	CONT	SECT	JOB	HIGHWAY
REVISIONS	DIST	COUNTY		SHEET NO.

DISCLAIMER:
The use of this standard is governed by the "Texas Engineering Practice Act". No warranty of any kind is made by TxDOT for any purpose whatsoever. TxDOT assumes no responsibility for the conversion of this standard to other formats or for incorrect results or damages resulting from its use.

DATE:
FILE:

BOX DATA

SECTION DIMENSIONS					Fill Height	M (Min)	REINFORCING (in²/ft) ②								① Liff Weight (Tons)
S (ft)	H (ft)	T_T (in)	T_B (in)	T_S (in)	(ft)	(in)	A_{S1}	A_{S2}	A_{S3}	A_{S4}	A_{S5}	A_{S6}	A_{S7}	A_{S8}	
5	3	8	7	6	<2	-	0.19	0.31	0.21	0.14	0.19	0.19	0.19	0.17	6.6
5	3	6	6	6	2<3	45	0.18	0.24	0.19	0.14	-	-	-	-	5.7
5	3	6	6	6	3-5	36	0.14	0.17	0.16	0.14	-	-	-	-	5.7
5	3	6	6	6	10	36	0.14	0.16	0.17	0.14	-	-	-	-	5.7
5	3	6	6	6	15	35	0.16	0.21	0.22	0.14	-	-	-	-	5.7
5	3	6	6	6	20	35	0.21	0.27	0.28	0.14	-	-	-	-	5.7
5	3	6	6	6	25	35	0.26	0.34	0.34	0.14	-	-	-	-	5.7
5	3	6	6	6	30	35	0.31	0.41	0.41	0.14	-	-	-	-	5.7
5	4	8	7	6	<2	-	0.19	0.33	0.24	0.14	0.19	0.19	0.19	0.17	7.2
5	4	6	6	6	2<3	45	0.16	0.27	0.22	0.14	-	-	-	-	6.3
5	4	6	6	6	3-5	45	0.14	0.19	0.18	0.14	-	-	-	-	6.3
5	4	6	6	6	10	36	0.14	0.18	0.18	0.14	-	-	-	-	6.3
5	4	6	6	6	15	35	0.14	0.23	0.24	0.14	-	-	-	-	6.3
5	4	6	6	6	20	35	0.17	0.30	0.31	0.14	-	-	-	-	6.3
5	4	6	6	6	25	35	0.21	0.37	0.38	0.14	-	-	-	-	6.3
5	4	6	6	6	30	35	0.25	0.44	0.45	0.14	-	-	-	-	6.3
5	5	8	7	6	<2	-	0.19	0.35	0.26	0.14	0.19	0.19	0.19	0.17	7.8
5	5	6	6	6	2<3	45	0.14	0.29	0.24	0.14	-	-	-	-	6.9
5	5	6	6	6	3-5	45	0.14	0.21	0.20	0.14	-	-	-	-	6.9
5	5	6	6	6	10	45	0.14	0.19	0.20	0.14	-	-	-	-	6.9
5	5	6	6	6	15	36	0.14	0.24	0.25	0.14	-	-	-	-	6.9
5	5	6	6	6	20	35	0.15	0.31	0.32	0.14	-	-	-	-	6.9
5	5	6	6	6	25	35	0.18	0.38	0.39	0.14	-	-	-	-	6.9
5	5	6	6	6	30	35	0.21	0.46	0.47	0.14	-	-	-	-	6.9
5	2	8	7	6	<2	-	0.20	0.31	0.20	0.14	0.22	0.19	0.19	0.17	6.0
5	2	6	6	6	30	44	0.39	0.33	0.34	0.14	-	-	-	-	5.1

⑤

① For Box Length = 8'-0"

② A_{S1} thru A_{S4}, A_{S7} and A_{S8} are minimum required areas of reinforcement per linear foot of box length. A_{S6} and A_{S5} are minimum required areas of reinforcement per linear foot of box width.

⑤ These designs were created by TxDOT and are not shown in the ASTM Specifications.

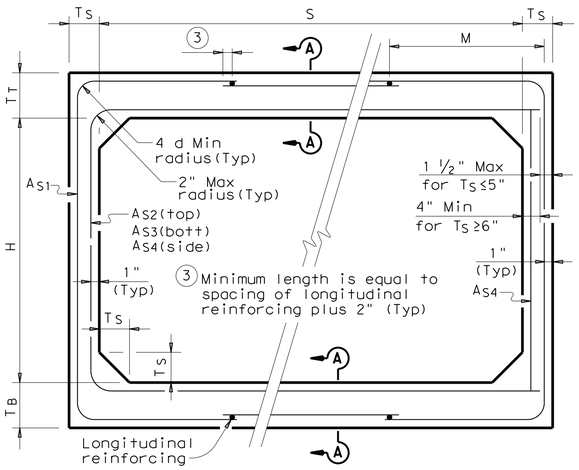

CORNER OPTION "A" CORNER OPTION "B"

FILL HEIGHT 2 FT AND GREATER

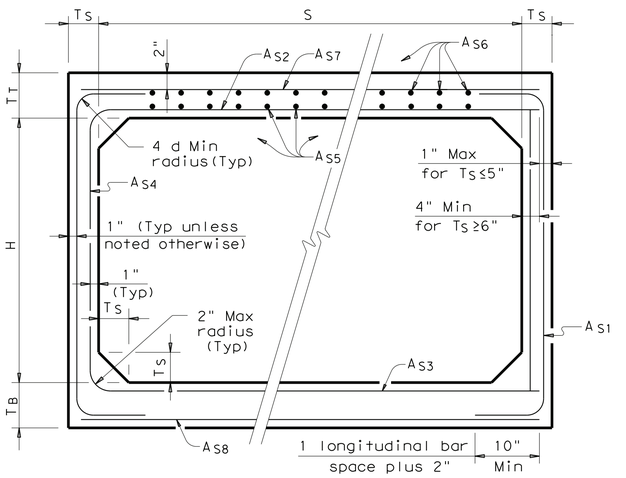

CORNER OPTION "A" CORNER OPTION "B"

FILL HEIGHT LESS THAN 2 FT

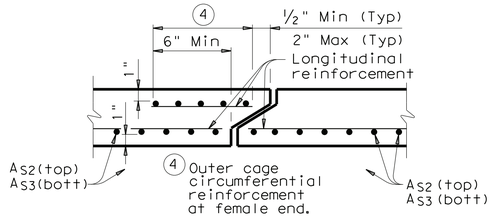

SECTION A-A

(TOP AND BOTTOM SLAB JOINT REINFORCEMENT)

GENERAL NOTES:

Designs shown conform to ASTM C1577.

Refer to ASTM C1577 for information or details not shown.

All concrete shall be Class "H" Concrete with a minimum compressive strength of 5,000 psi.

See SCP-MD standard sheet for miscellaneous details and notes not shown.

In lieu of furnishing the designs shown on this sheet, the contractor may furnish an alternate design that is equal to or exceeds the box design for the design fill height in the table. Shop plans for alternate designs shall be submitted in accordance with Item "Precast Concrete Structural Members (Fabrication)".

HL93 LOADING

Texas Department of Transportation

Bridge Division Standard

SINGLE BOX CULVERTS PRECAST

5'-0" SPAN

SCP-5

FILE: scp05sts.dgn	DN: GAF	CK: LMW	DW: BWH/TxDOT	CK: GAF
©TxDOT February 2010	CONT	SECT	JOB	HIGHWAY
REVISIONS				
	DIST	COUNTY		SHEET NO.

DISCLAIMER:
The use of this standard is governed by the "Texas Engineering Practice Act". No warranty of any kind is made by TxDOT for any purpose whatsoever. TxDOT assumes no responsibility for the conversion of this standard to other formats or for incorrect results or damages resulting from its use.

DATE:
FILE:

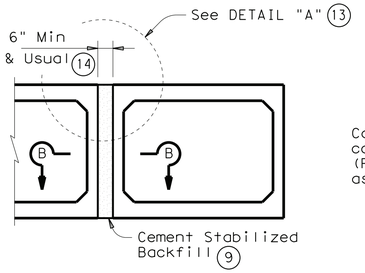

MULTIPLE UNIT PLACEMENT

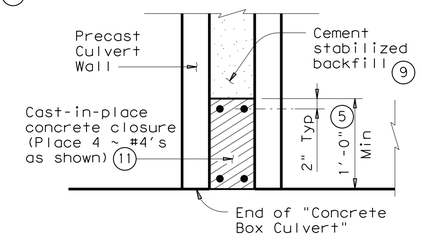

SECTION B-B

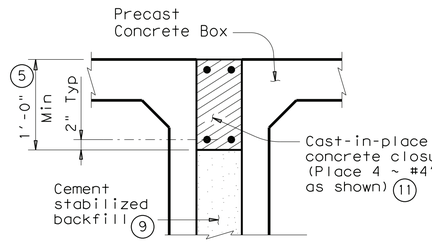

DETAIL "A" (13)

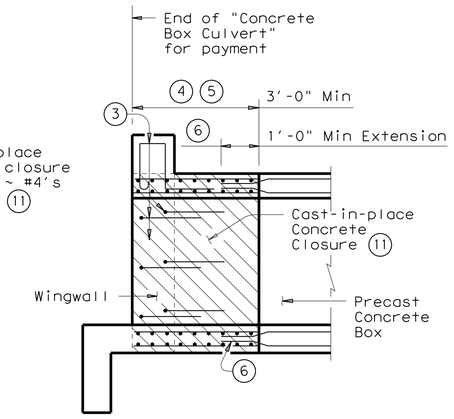

WINGWALL CONNECTION

(Also applies to Safety End Treatment)

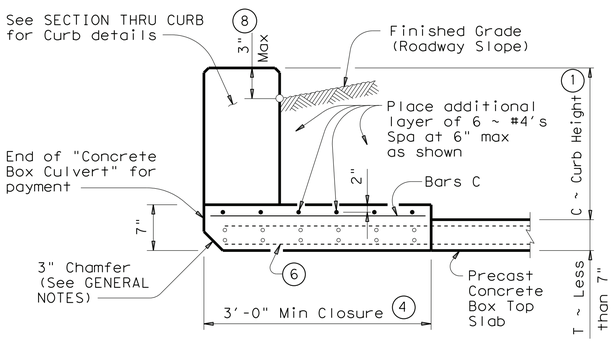

SECTION THRU TOP SLABS LESS THAN 7"

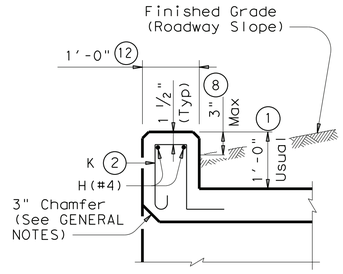

SECTION THRU CURB

(10) QUANTITIES PER FOOT OF CURB	
Reinforcing Steel	4.18 Lb
Concrete	0.037 CY

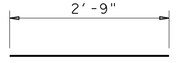

BARS C ~ #4
(Spa = 1'-0" Max)

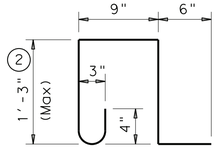

BARS K ~ #4
(Spa = 1'-0" Max)
(Length = 4'-3")

1. 0" min to 5'-0" max. Estimated curb heights are shown elsewhere in the plans. For structures with pedestrian rail, bicycle rail or curbs taller than 1'-0", refer to ECD standard. For structures with T6 traffic rail, refer to T6-CM standard. For structures with traffic rail, other than T6, refer to RAC standard.
2. For curbs less than 1'-0" high, tilt Bars K or reduce bar height as necessary to maintain cover. For curbs less than 3" high, Bars K may be omitted.
3. Curb, Wingwall or Safety End Treatment reinforcing shall extend into concrete closure. Any reinforcing that does not fit into the closure shall be bent or trimmed as necessary.
4. Cast-in-place concrete closure shall be 3'-0" min. Boxes shall be cast short or broken back in the field. All reinforcing in the closure shall be the same size and spacing as in the precast box section. Except where shown otherwise, the cast-in-place closure shall be flush with the inside and outside faces of the precast box section.
5. For multiple unit placements the length of the closure for the interior walls may be adjusted as necessary. The length of the top slab, bottom slab, and exterior wall closure shall not be less than 3'-0". See Section B-B detail when interior walls are cast full length.
6. Precast box reinforcing shall extend a minimum of 1'-0" into concrete closure (Typ).
7. Bands of reinforcing matching the inside and outside face reinforcing shall be placed in the gaps of the top and bottom slabs. A band matching the outside face reinforcing of the wall shall be placed in the gaps of the walls (placed in the outside face only). The bands shall be tack welded to the exposed reinforcing at each point of contact.
8. For vehicle safety, the following requirements must be met:
   - For structures without bridge rail, curbs shall project no more than 3" above finished grade.
   - For structures with bridge rail, curbs shall be flush with finished grade.

   Curb heights shall be reduced, if necessary, to meet the above requirements. No changes will be made in quantities and no additional compensation will be allowed for this work.
9. Cement Stabilized Backfill between boxes is considered part of the Box Culvert for payment.
10. All curb concrete and reinforcing is considered part of the Box Culvert for payment.
11. Any additional concrete and reinforcing required for the closures shall be considered as subsidiary to the Concrete Box Culvert.
12. 1'-0" typical. 2'-0" when RAC standard is referred to elsewhere in the plans.
13. For multiple unit placement with overlay, with 1 to 2 course surface treatment, or with the top slab as the final riding surface, provide wall closure as shown in DETAIL "A".
14. This dimension may be increased with approval of the Engineer to allow the precast boxes to be tunneled or jacked in accordance with Item 476, "Jacking, Boring, or Tunneling Pipe or Box". No payment will be made for any additional material in the gap between adjacent boxes.

GENERAL NOTES:

Designed according to AASHTO LRFD Specifications.

All closure concrete shall be Class "C" with a minimum compressive strength of 3600 psi and shall be placed according to the Item, "Concrete Substructures".

Any additional concrete required for the closures shall be considered as subsidiary to the Concrete Box Culvert.

Refer to the Single Box Culverts Precast standard for details not shown.

The bottom edge of the top slab closure shall be chamfered 3 inches at the entrance.

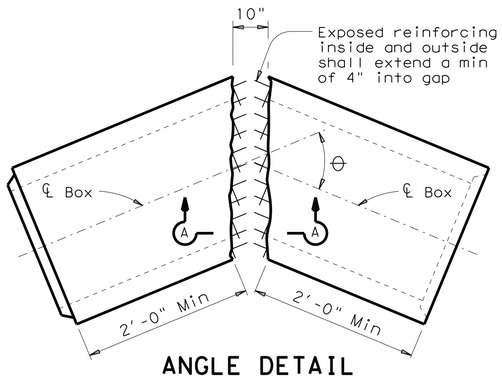

ANGLE DETAIL

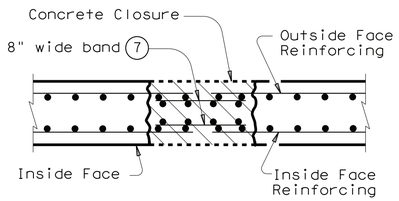

SECTION A-A

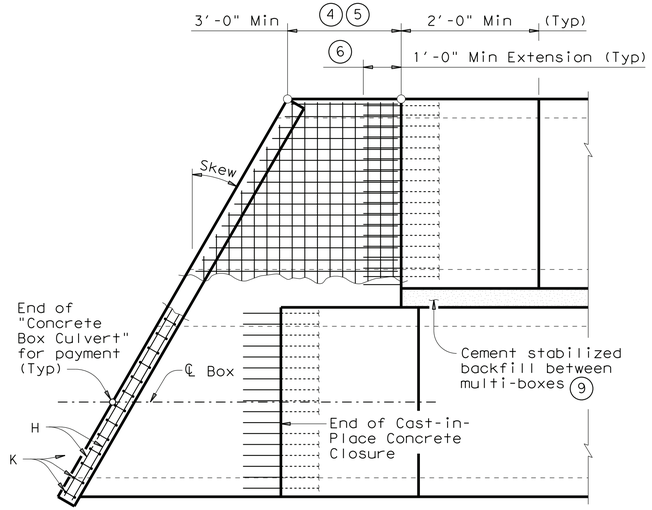

PLAN OF SKEWED ENDS

(Showing multi-box placement)

HL93 LOADING

Texas Department of Transportation

Bridge Division Standard

BOX CULVERTS PRECAST MISCELLANEOUS DETAILS

SCP-MD

FILE: scpmdsts.dgn	DN: GAF	CK: LMW	DW: BWH/TxDOT	CK: GAF
©TxDOT February 2010	CONT	SECT	JOB	HIGHWAY
REVISIONS				
	DIST	COUNTY		SHEET NO.

DISCLAIMER:
The use of this standard is governed by the "Texas Engineering Practice Act". No warranty of any kind is made by TxDOT for any purpose whatsoever. TxDOT assumes no responsibility for the conversion of this standard to other formats or for incorrect results or damages resulting from its use.

DATE:
FILE:

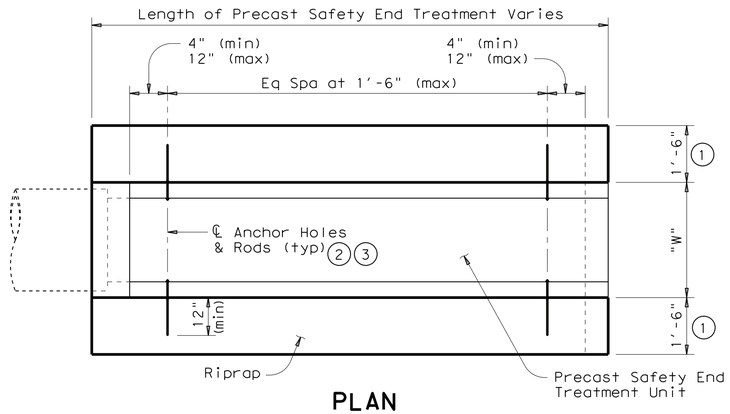

PLAN

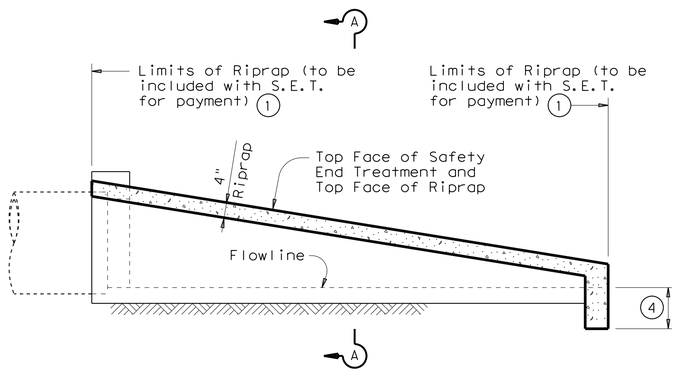

LONGITUDINAL ELEVATION

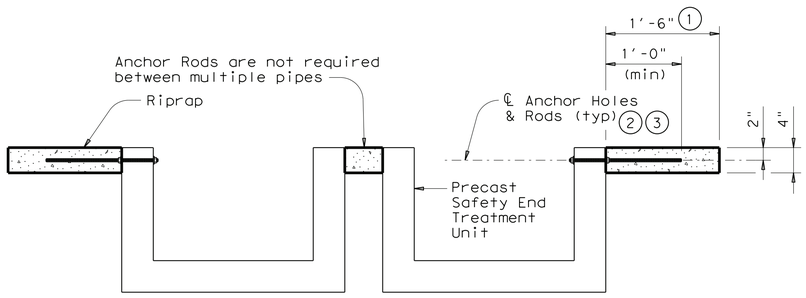

MULTIPLE PIPE INSTALLATION

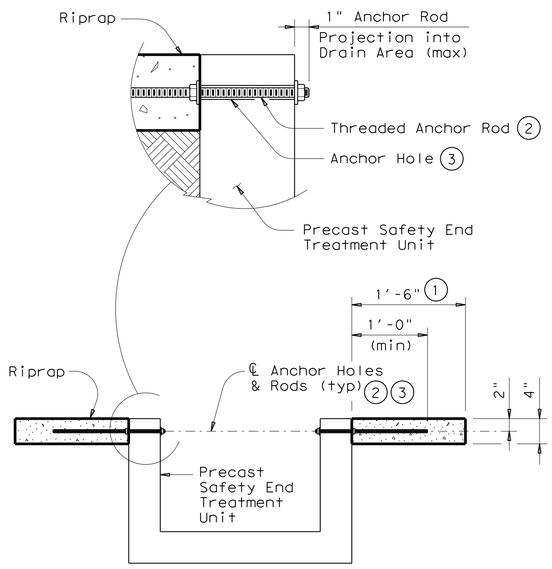

SINGLE PIPE INSTALLATION

SECTION A-A

ESTIMATED CONCRETE RIPRAP QUANTITIES (CY) 5

Nominal Culvert (Pipe) I.D.	PSET-SC & PSET-SP Standards				PSET-RC & PSET-RP Standards			
	Unit Width "W"	Side Slope			Unit Width "W"	Side Slope		
		3:1	4:1	6:1		3:1	4:1	6:1
12"	23.0"	0.1	0.2	0.2	16.0"	0.1	0.1	0.2
15"	26.5"	0.2	0.2	0.3	19.5"	0.1	0.2	0.2
18"	30.0"	0.2	0.2	0.3	23.0"	0.2	0.2	0.3
24"	37.0"	0.3	0.3	0.5	30.0"	0.2	0.3	0.4
30"	44.5"	0.3	0.4	0.6	37.0"	0.3	0.3	0.5
36"	51.5"	0.4	0.5	0.7	44.0"	0.3	0.4	0.6
42"	58.5"	0.5	0.6	0.8	51.0"	0.4	0.5	0.7

(1) Riprap placed beyond the limits shown will be paid as Concrete Riprap in accordance with Item 432, "Riprap". When Riprap is cast integrally with the Precast Safety End Treatment, this dimension shall be 1'-0" minimum.

(2) ½" Diam A307 Gr.A threaded Anchor Rod w/ 2 nuts & 2 washers. All components shall be galvanized in accordance with Item 445, "Galvanizing". Galvanizing that is damaged during transport or construction shall be repaired in accordance with the specifications.

(3) ¾" through holes in walls of Safety End Treatment for Riprap Anchor Rods may be drilled with rotary (coring or masonry) type drilling equipment or may be formed. Percussive (star) type drilling equipment shall not be used. If holes are drilled, spalls in the inside face of the wall exceeding ½" from the holes shall be patched.

(4) Provide Riprap Toe Wall when dimension is shown elsewhere in the plans or when field conditions require a Toe Wall.

(5) Quantities shown are for one end of one reinforced concrete pipe culvert. For multiple pipe culverts, quantities will need to be adjusted. Riprap quantities are for Contractor's information only. Quantities are based on the minimum unit lengths shown on the Precast S.E.T. standards.

GENERAL NOTES:

Precast Safety End Treatment for reinforced concrete pipe may be used for TYPE II end treatment as specified in Item 467, "Safety End Treatment".

Riprap shall be Class "B" Riprap in accordance with Item 432, "Riprap".

Payment for Riprap and Toewalls is included in the Price Bid for each Safety End Treatment.

Synthetic fibers listed on the "Fibers for Concrete" Material Producer List (MPL) may be used in lieu of steel reinforcing in riprap concrete unless noted otherwise. The anchor rods shown are always required.

Refer to PSET-SC or PSET-SP standard sheets for details of square Safety End Treatments not shown. Refer to PSET-RC or PSET-RP standard sheets for details of round Safety End Treatments not shown.

For precast units with integrally cast Riprap, reinforcing steel in the amount on 0.26 sq in/ft minimum shall be substituted for the threaded anchor rods shown. When requested, sealed engineering drawings shall be submitted for approval prior to construction. Shop drawings will not be required. Note that a proprietary precast unit with integral Riprap is available from L&R Precast Concrete Works, Inc. (956) 583-6293 or www.lrprecast.com.

These Riprap details are only applicable when notes that require placement of Riprap with Precast Safety End Treatments are shown elsewhere in the plans.

Precast units with integrally cast Riprap shall be permitted unless noted otherwise on the plans.

Texas Department of Transportation

Bridge Division Standard

PRECAST SAFETY END TREATMENT
TYPE II
RIPRAP DETAILS

PSET-RR

FILE: psetrrse.dgn	DN: GAF	CK: TxDOT	DW: JRP	CK: GAF
©TxDOT February 2010	CONT	SECT	JOB	HIGHWAY
REVISIONS				
11-10: Add note for synthetic fibers.	DIST	COUNTY		SHEET NO.

DISCLAIMER:
The use of this standard is governed by the "Texas Engineering Practice Act". No warranty of any kind is made by TxDOT for any purpose whatsoever. TxDOT assumes no responsibility for the conversion of this standard to other formats or for incorrect results or damages resulting from its use.

DATE:
FILE:

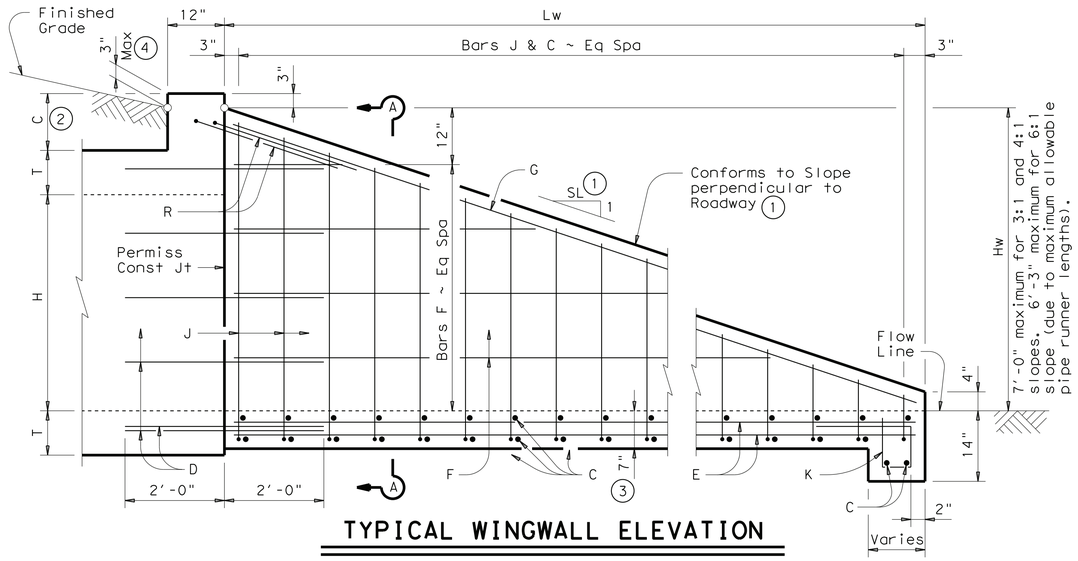

TYPICAL WINGWALL ELEVATION

(Pipe Runners not shown for clarity)

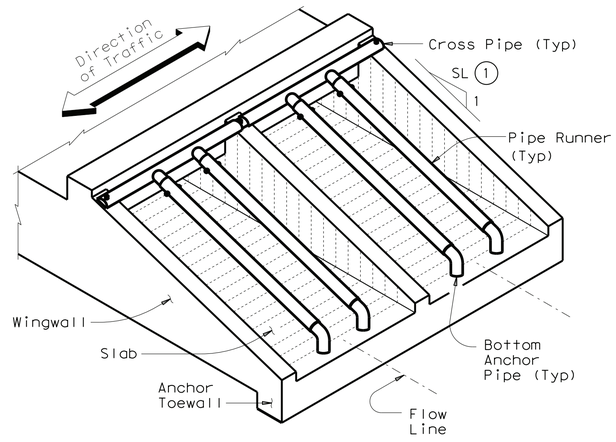

ISOMETRIC VIEW OF TYPICAL INSTALLATION

Formulas: (All values are in Feet)

Hw = H + T + C - 0.250'

Lw = (Hw - 0.333') (SL)

For Cast-in-place culverts:

Atw = (N) (S) + (N + 1) (U)

For Precast culverts:

Atw = (N) (2U + S) + (N - 1) (0.500')

Total Wingwall Area (S.F.)
= (0.5) (Hw + 0.333') (Lw) (N + 1)

Total Concrete Volume (C.Y.)
= [(Wingwall Area) (0.583') +
(Lw) (Atw) (0.583') +
(Atw) (1.167') (1.167' - 0.583')] ÷ (27)

Pipe Runner Length
= (Lw) (K1) - (1.917')

Total Reinforcing (Lbs)
= (1.55) (Lw) (Atw) +
(4.43) (Atw) +
(K2) (Hw) (N + 1) ($\sqrt{Lw}$)

C = Height of Curb above top of Top Slab
Hw = Height of Wingwall
K = Constant Value for use in formulas

Slope SL:1	K1	K2
3:1	1.054	7.45
4:1	1.031	8.49
6:1	1.014	10.30

Atw = Anchor Toewall Length
Lw = Length of Wingwall
N = Number of Culvert Barrels
SL:1 = Side Slope Ratio (Horizontal : 1 Vertical)

See applicable box culvert standard for H, S, T, and U values.

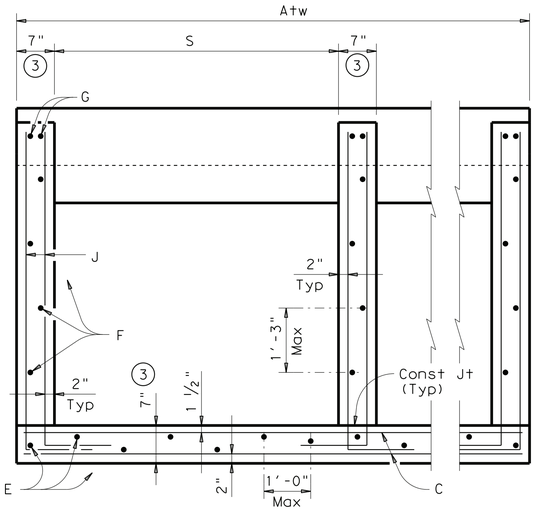

SECTION A-A

(Showing typical Wingwall and Wing Slab reinforcing)
(Pipe Runners not shown for clarity)

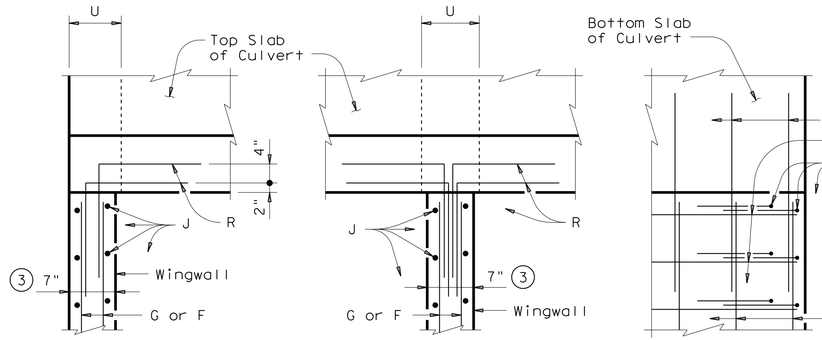

AT TOP OF EXTERIOR WINGWALL
(Cast-in-Place Culvert)

AT TOP OF INTERIOR WINGWALL
(Cast-in-Place Culvert)

AT OUTSIDE OF BOTTOM SLAB
(Cast-in-Place Culvert)

PLAN VIEWS OF CORNER DETAILS

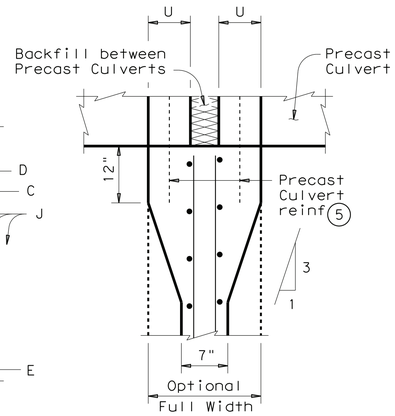

AT INTERIOR WINGWALL
(Precast Culvert)

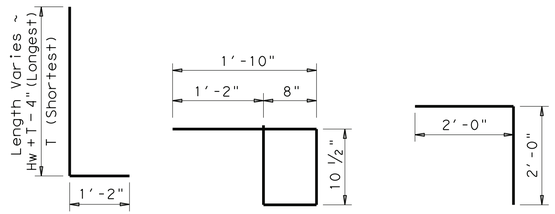

BARS J

BARS K
(Length = 4'-3")

BARS R

TABLE OF REINFORCING BAR SIZES & SPACING		
Bar	Size	Spacing
C	#4	10" Max
D	#4	match F & E
E	#4	1'- 0" Max
F	#4	1'- 3" Max
G	#6	Shown
J	#4	10" Max
K	#4	1'- 0" Max
R	#4	Shown

1. Recommended values of slope are: 3:1, 4:1, & 6:1. Slope shall be 3:1 or flatter.
2. 0" min to 5'-0" max. Estimated curb heights are shown elsewhere in the plans. For structures without railing and curbs taller than 1'-0", refer to ECD standard.
3. Wingwall and slab thicknesses may be the same as the adjacent culvert wall and slab thicknesses (7" Minimum). If thicknesses greater than the minimum (7") are used, no changes will be made in quantities and no additional compensation will be allowed.
4. For vehicle safety, curbs shall project no more than 3" above finished grade. Curb heights shall be reduced, if necessary, to meet these requirements. No changes will be made in quantities and no additional compensation will be allowed for this work.
5. For Culverts with C = 0", the precast culvert reinforcing may extend 1'-0" minimum into Wingwall. Wingwall Bars D and R may be omitted. Otherwise, refer to the "Wingwall Connection Detail" on the SCP-MD standard.

GENERAL NOTES:

Designed according to AASHTO LRFD Specifications.

The Safety End Treatments shown herein are intended for use in those installations where out of control vehicles are likely to traverse the openings approximately perpendicular to the Pipe Runners.

Pipe Runners are designed for a traversing load of 1,800 pounds at yield as recommended by Research Report 280-1, "Safety Treatment of Roadside Cross-Drainage Structures", Texas Transportation Institute, March 1981.

All reinforcing steel shall be Grade 60. All reinforcing shall be adjusted as necessary to provide a minimum clear cover of 1 ¼".

All concrete shall be Class "C" and shall have a minimum compressive strength of 3600 psi.

The quantities for Pipe Runners, reinforcing steel, and concrete, resulting from the formulas given herein are for Contractor's information only.

Pipe Runners, Cross Pipes, and Anchor Pipes shall conform to the requirements of ASTM A53 (Type E or S, Grade B), ASTM A500 (Grade B), or API 5LX52.

Bolts and nuts shall conform to ASTM A307.

All steel components, except the concrete reinforcing, shall be galvanized after fabrication. Galvanizing damaged during transport or construction shall be repaired in accordance with the specifications.

See BCS standard sheet for additional dimensions and information.

Alternate design drawings bearing the seal of a professional engineer will be acceptable for precast construction of the Safety End Treatments.

Texas Department of Transportation

Bridge Division Standard

SAFETY END TREATMENT

FOR 0° SKEW BOX CULVERTS
(MAXIMUM Hw = 7'-0")
TYPE I ~ CROSS DRAINAGE

SETB-CD

FILE: setbcdse.dgn	DN: GAF	CK: CAT	DW: JRP	CK: GAF
©TxDOT February 2010	CONT	SECT	JOB	HIGHWAY
REVISIONS	DIST	COUNTY		SHEET NO.

DISCLAIMER:
The use of this standard is governed by the "Texas Engineering Practice Act". No warranty of any kind is made by TxDOT for any purpose whatsoever. TxDOT assumes no responsibility for the conversion of this standard to other formats or for incorrect results or damages resulting from its use.

DATE:
FILE:

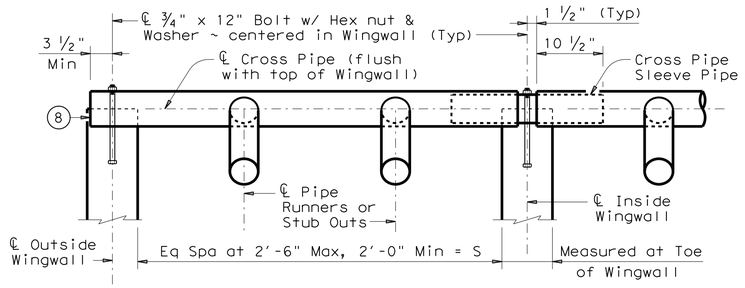

NOTE: At Contractor's option, the Cross Pipe may be made continuous across the Inside Wingwalls. If such option is selected, the Sleeve Pipe shall be omitted and a 15⁄16" diameter through hole be made in the Cross Pipe to accept the anchor bolt at the centerline of each Inside Wingwall.

CROSS PIPE INSTALLATION DETAILS

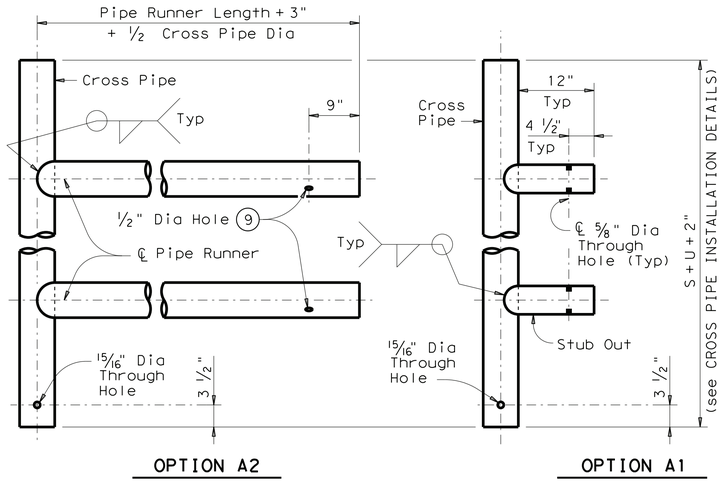

OPTION A2 OPTION A1

FOR USE IN OUTSIDE CULVERT BAY

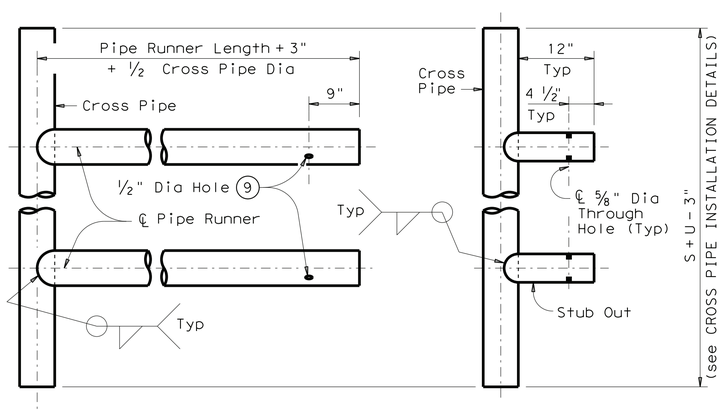

OPTION A2 OPTION A1

FOR USE IN INSIDE CULVERT BAY

CROSS PIPE AND CONNECTIONS DETAILS

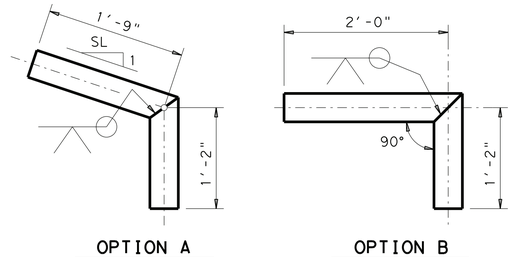

OPTION A OPTION B

BOTTOM ANCHOR PIPE DETAILS (10)

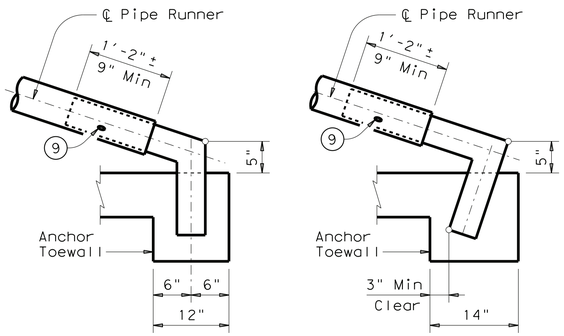

OPTION B1 OPTION B2

BOTTOM ANCHOR TOEWALL DETAILS

(Wingwall not shown for clarity)

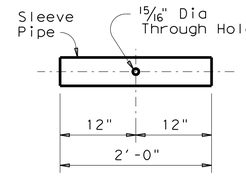

CROSS PIPE SLEEVE PIPE DETAILS

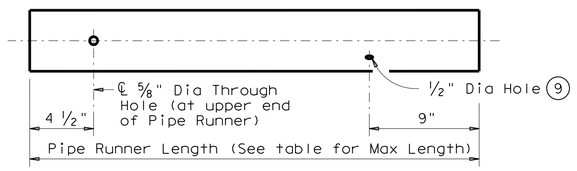

NOTE: The separate Pipe Runner shown is required when Cross Pipe Connection Option A1 is used.

PIPE RUNNER DETAILS

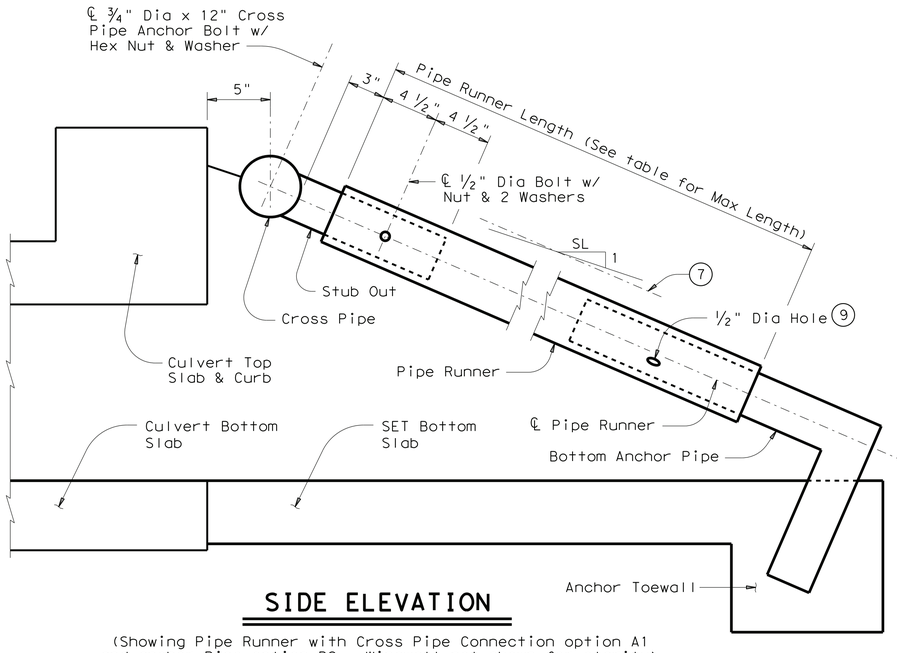

SIDE ELEVATION

(Showing Pipe Runner with Cross Pipe Connection option A1 and anchor Pipe option B2. Wingwall not shown for clarity)

6. Cross Pipe shall be the same size as the Pipe Runner. Cross Pipe Stub Out shall be the same size as the Anchor Pipe.
7. Note that actual slope of Safety Pipe Runner may vary slightly from Side Slope.
8. Care shall be taken to ensure that Riprap concrete does not flow into the Cross Pipe so as to permit disassembly of the bolted connection to allow cleanout access.
9. After installation, the ½" hole shall be inspected to ensure that the lap of the Safety Pipe Runner with the Bottom Anchor Pipe is adequate.
10. At fabricator's option, a heat bend to a smooth 5" radius or a manufactured elbow (of the same material as the Runner) may be substituted for the mitered and welded joint in the Bottom Anchor Pipe.

MAXIMUM PIPE RUNNER LENGTHS & REQUIRED PIPE RUNNER AND ANCHOR PIPE SIZES (6)

Maximum Pipe Runner Length	Required Pipe Runner Size			Required Anchor Pipe Size		
	Pipe Size	Pipe O.D.	Pipe I.D.	Pipe Size	Pipe O.D.	Pipe I.D.
10'- 0"	3" STD	3.500"	3.068"	2" STD	2.375"	2.067"
19'- 8"	4" STD	4.500"	4.026"	3" STD	3.500"	3.068"
34'- 2"	5" STD	5.563"	5.047"	4" STD	4.500"	4.026"

Texas Department of Transportation — Bridge Division Standard

SAFETY END TREATMENT

FOR 0° SKEW BOX CULVERTS
(MAXIMUM Hw = 7'-0")
TYPE I ~ CROSS DRAINAGE

SETB-CD

FILE: setbcdse.dgn	DN: GAF	CK: CAT	DW: JRP	CK: GAF
©TxDOT February 2010	CONT	SECT	JOB	HIGHWAY
REVISIONS	DIST	COUNTY		SHEET NO.

DISCLAIMER:
The use of this standard is governed by the "Texas Engineering Practice Act". No warranty of any kind is made by TxDOT for any purpose whatsoever. TxDOT assumes no responsibility for the conversion of this standard to other formats or for incorrect results or damages resulting from its use.

DATE:
FILE:

TABLE OF DIMENSIONS & REINFORCING STEEL
(Wings for One Structure End)

Maximum Wingwall Height (10) Hw	W	X	Y	Z	Variable Reinforcing Bars J1 Size	Bars J1 Spa	Bars J2 Size	Bars J2 Spa	Estimated (3) Quantities per ft of wing length (2~Wings) Reinf (Lb/Ft)	Conc (CY/Ft)
2'-6"	2'- 5"	1'- 0"	9"	7"	#4	1'-0"	#4	1'-0"	33.73	0.248
3'-0"	2'- 5"	1'- 0"	9"	7"	#4	1'-0"	#4	1'-0"	37.07	0.261
3'-6"	2'- 5"	1'- 0"	9"	7"	#4	1'-0"	#4	1'-0"	37.74	0.273
4'-0"	2'- 5"	1'- 0"	9"	7"	#4	1'-0"	#4	1'-0"	38.41	0.285
4'-6"	3'- 2"	1'- 6"	1'- 0"	7"	#4	1'-0"	#4	1'-0"	41.75	0.330
5'-0"	3'- 2"	1'- 6"	1'- 0"	7"	#4	1'-0"	#4	1'-0"	45.09	0.343
5'-6"	3'- 2"	1'- 6"	1'- 0"	7"	#4	1'-0"	#4	1'-0"	45.75	0.355
6'-0"	3'- 2"	1'- 6"	1'- 0"	7"	#4	1'-0"	#4	1'-0"	46.42	0.367
7'-0"	3'- 8"	1'- 9"	1'- 3"	7"	#4	1'-0"	#4	1'-0"	52.77	0.414
8'-0"	4'- 2"	2'- 0"	1'- 6"	8"	#5	1'-0"	#4	1'-0"	60.19	0.486
9'-0"	4'- 8"	2'- 3"	1'- 9"	8"	#4	6"	#4	6"	81.49	0.535
10'-0"	5'- 2"	2'- 6"	2'- 0"	8"	#5	6"	#4	6"	97.25	0.584
11'-0"	5'- 8"	2'- 9"	2'- 3"	8"	#6	6"	#5	6"	133.65	0.634
12'-0"	6'- 2"	3'- 0"	2'- 6"	9"	#7	6"	#5	6"	162.29	0.721

TABLE OF WINGWALL REINFORCING (2~Wings)

Bar	Size	No.	Spa
DL & DS	#5	~	1'-0"
E	#4	~	1'-0"
F	#4	~	1'-0"
G	#6	4	~
M	#4	4	~
P	#4	~	1'-0"
RL	#5	3	~
RS	#5	3	~
V	#4	~	1'-0"

TABLE OF ESTIMATED CULVERT TOEWALL QUANTITIES

Bar	Size	No.	Spa
L	#4	~	1'-6"
Q	#4	1	~
Reinf (Lb/Ft)			2.45
Conc (CY/Ft)			0.037

TABLE OF ESTIMATED ANCHOR TOEWALL QUANTITIES

Bar	Size	No.	Spa
K	#4	~	1'-0"
N	#5	6	~
OL	#4	3	~
OS	#4	3	~
Reinf (Lb/Ft)			9.82
Conc (CY/Ft)			0.074

(1) Extend Bars P 3'-0" minimum into bottom slab of Box Culvert.

(2) Adjust to fit as necessary to maintain 1 ¼" clear cover and 4" minimum between bars.

(3) Quantities shown are based on an average wing height for two wings (one structure end). To determine total quantities for two wings multiply the tabulated values by 0.5(A + Lw).

(4) Recommended values of Slope are: 3:1, 4:1, & 6:1. Slope shall be 3:1 or flatter.

(5) When shown elsewhere on the plans, a 5" deep concrete riprap shall be constructed. Payment for riprap shall be as required by Item 432, "Riprap". Unless otherwise shown on the plans or directed by the Engineer, construction joints or grooved joints, oriented in the direction of flow, and shall extend across the full distance of the riprap, at intervals of approximately 20'. When such riprap is provided, the culvert toewall shown in SECTION B-B will not be required.

(6) At Contractor's option, Culvert Toewall may be ended flush with Wingwall Toewall. Adjust reinforcing from that shown as necessary.

(7) 3" min to 5'-0" max. Estimated curb heights are shown elsewhere in the plans. For structures without railing and curbs taller than 1'-0", refer to ECD standard.

(8) For vehicle safety, curbs shall project no more than 3" above finished grade. Curb heights shall be reduced, if necessary, to meet these requirements. No changes will be made in quantities and no additional compensation will be allowed for this work.

(9) Culvert Skew (limited to 15° or 30°)

(10) See "Table Of Maximum Wing Heights" for various slopes. Height is limited based on a 33'-6" maximum safety pipe runner length.

(11) Typical Wingwall angle for all skews.

TABLE OF MAXIMUM (10) WING HEIGHTS (Hw max)

Side Slope	Hw max
3:1	11'- 5"
4:1	8'-10"
6:1	6'- 1"

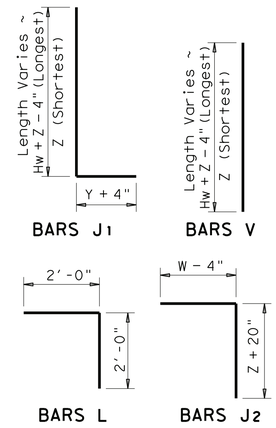

WING DIMENSION CALCULATIONS:

Formulas: (All values are in Feet)

Hw = H + T + C - 0.250' (10)
A = (Hw - 0.333') (SL)
B = (A) [Tangent (Θ + 15°)]
Lw = (A) ÷ [Cosine (Θ + 15°)]

For Cast-in-place culverts:

Ltw = [(N) (S) + (N + 1) (U)] ÷ (Cosine Θ)

For Precast culverts:

Ltw = [(N) (2U + S) + (N - 1) (0.500')] ÷ (Cosine Θ)

Lc = (Ltw) - (2U) ÷ (Cosine Θ)
Atw = (Lc) + (B)
Total Wingwall Area (Two Wings ~ S.F.) = (0.5) (Hw + 0.333') (Lw + A)

Hw = Height of Wingwall
SL:1 = Side Slope Ratio (Horizontal : 1 Vertical)
Lw = Length of Wingwall
Ltw = Culvert Toewall Length
Lc = Culvert Curb between Wings
Atw = Anchor Toewall Length
N = Number of Culvert Spans
Θ = Culvert Skew

See applicable box culvert standard for H, S, T, and U values. See Table of Maximum Wall Heights for limits on Hw.

GENERAL NOTES:

Designed according to AASHTO LRFD Specifications.

The Safety End Treatments shown herein are intended for use in those installations where out of control vehicles are likely to traverse the openings approximately perpendicular to the Pipe Runners.

Pipe Runners are designed for a traversing load of 1,800 pounds at yield as recommended by Research Report 280-1, "Safety Treatment of Roadside Cross-Drainage Structures", Texas Transportation Institute, March 1981.

All reinforcing steel shall be Grade 60.

Synthetic fibers listed on the "Fibers for Concrete" Material Producer List (MPL) may be used in lieu of steel reinforcing in riprap concrete unless noted otherwise.

All concrete shall be Class "C" and shall have a minimum compressive strength of 3600 psi.

All reinforcing bars shall be adjusted to provide a minimum of 1 ¼" clear cover.

When structure is founded on solid rock, depth of toewalls for culverts and wingwalls may be reduced or eliminated as directed by the Engineer.

See BCS sheet for additional dimensions and information.

All bolts, nuts, washers, brackets, angles, and pipe runners are considered parts of the Safety End Treatment for payment.

Pipe Runners shall conform to the requirements of ASTM A53 (Type E or S, Grade B), ASTM A500 (Grade B), or API 5LX52.

Bolts and nuts shall conform to ASTM A307. Steel plates shall conform to ASTM A36. All steel components, except reinforcing, shall be galvanized. Galvanizing damaged during transport or construction shall be repaired in accordance with the specifications.

The quantities for concrete and reinforcing steel resulting from the formulas given on this sheet are for Contractor's information only.

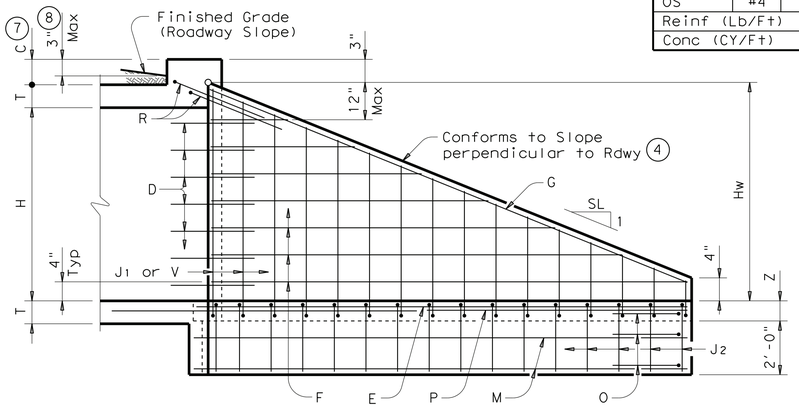

INSIDE ELEVATION OF WINGWALL

(Showing reinforcing. Culvert and Culvert Toewall reinforcing not shown for clarity.)

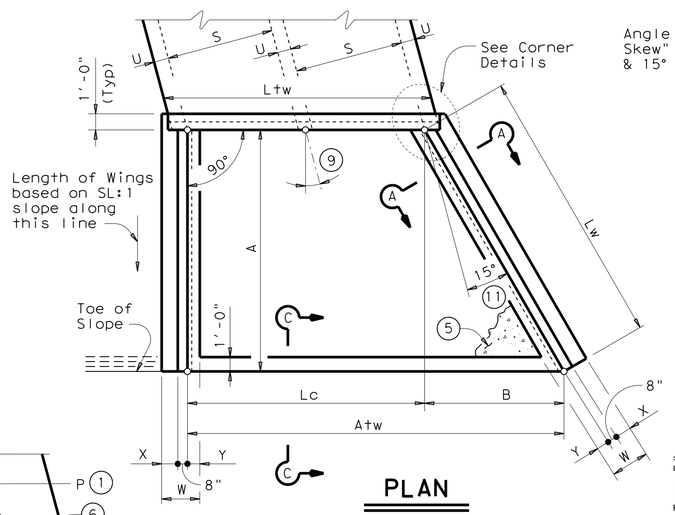

PLAN

(Showing dimensions and 15° Skew.)

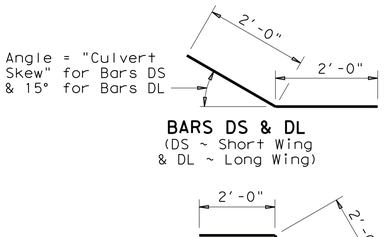

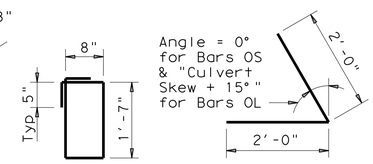

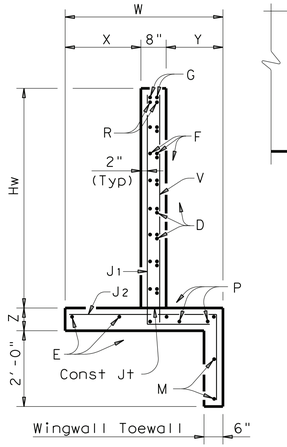

SECTION A-A

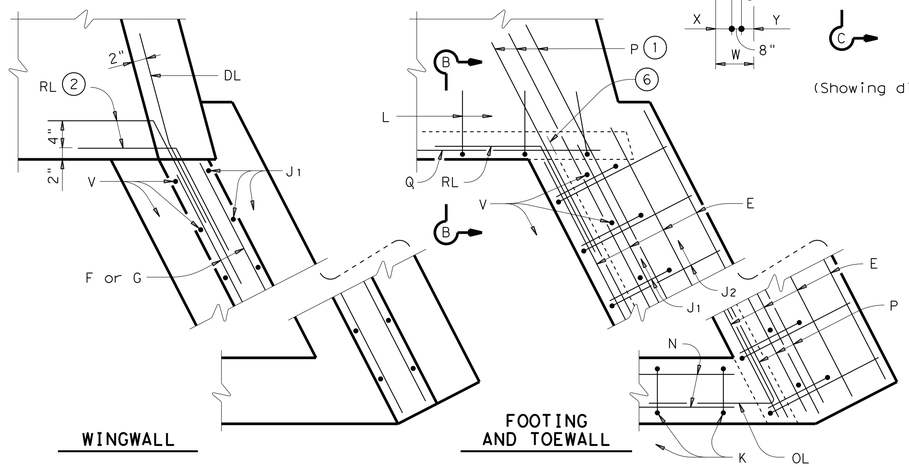

CORNER DETAILS

WINGWALL

FOOTING AND TOEWALL

(Culvert and Culvert Toewall reinforcing not shown for clarity.)

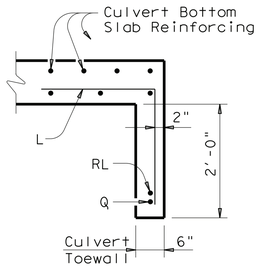

SECTION B-B (5)

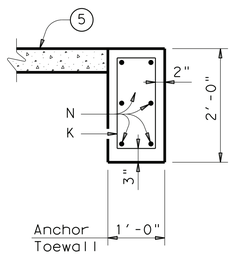

SECTION C-C

SHEET 1 OF 3

Texas Department of Transportation

Bridge Division Standard

SAFETY END TREATMENT WITH FLARED WINGS

FOR 15° & 30° SKEW BOX CULVERTS
TYPE I ~ CROSS DRAINAGE

SETB-FW-S

FILE: setbfsse.dgn	DN: GAF	CK: CAT	DW: TxDOT	CK: GAF
©TxDOT February 2010	CONT	SECT	JOB	HIGHWAY
REVISIONS				
11-10: Add note for synthetic fibers.	DIST	COUNTY		SHEET NO.

DISCLAIMER:
The use of this standard is governed by the "Texas Engineering Practice Act". No warranty of any kind is made by TxDOT for any purpose whatsoever. TxDOT assumes no responsibility for the conversion of this standard to other formats or for incorrect results or damages resulting from its use.

DATE:
FILE:

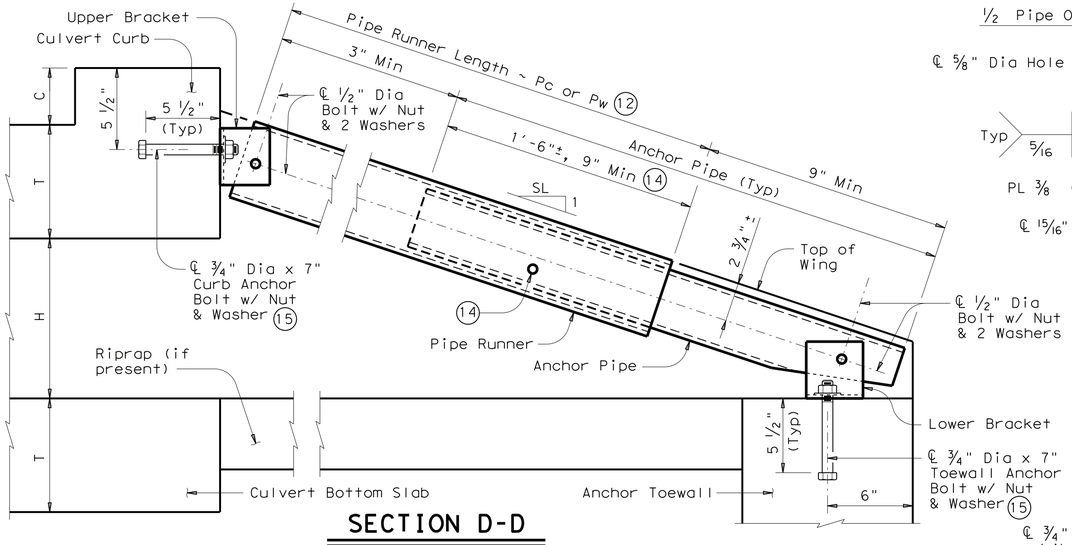

SECTION D-D

(Showing Curb Pipe Runner. Except for upper bracket, Wingwall Pipe Runners are similar.)

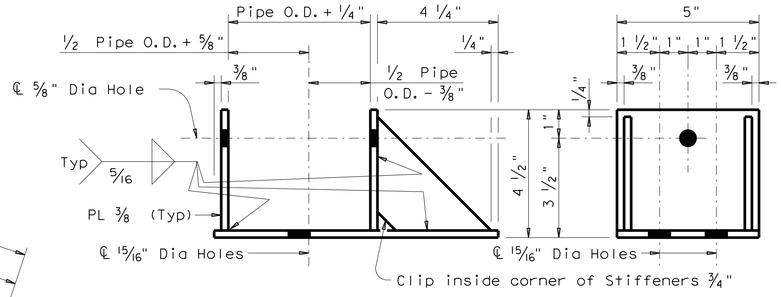

ELEVATION SIDE VIEW

¾" Anchor Bolt shall be installed in hole nearest to the culvert curb. Other bolt hole is intended for use on the opposite hand wingwall.

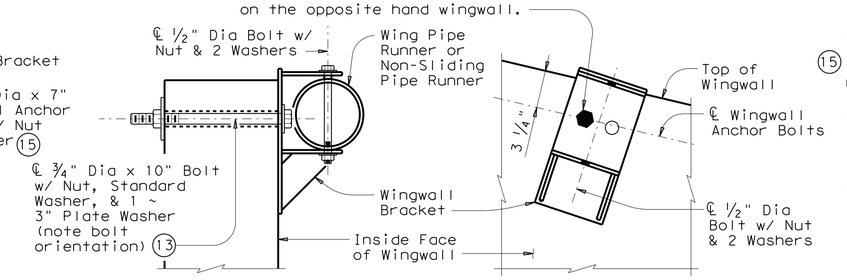

SECTION E-E (Showing installed bracket.)

ELEVATION (Showing installed bracket normal to Wall. Pipe not shown for clarity.)

Note: Wingwall Bracket shall match the Upper Curb Bracket size.

WINGWALL BRACKET DETAILS

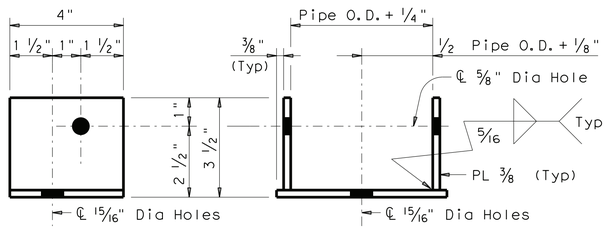

SIDE VIEW ELEVATION

Note: Upper and Lower Brackets shall, except for the brackets used with Non-Sliding Pipe Runners, match the required pipe diameters as shown in the table.

UPPER & LOWER BRACKET DETAILS

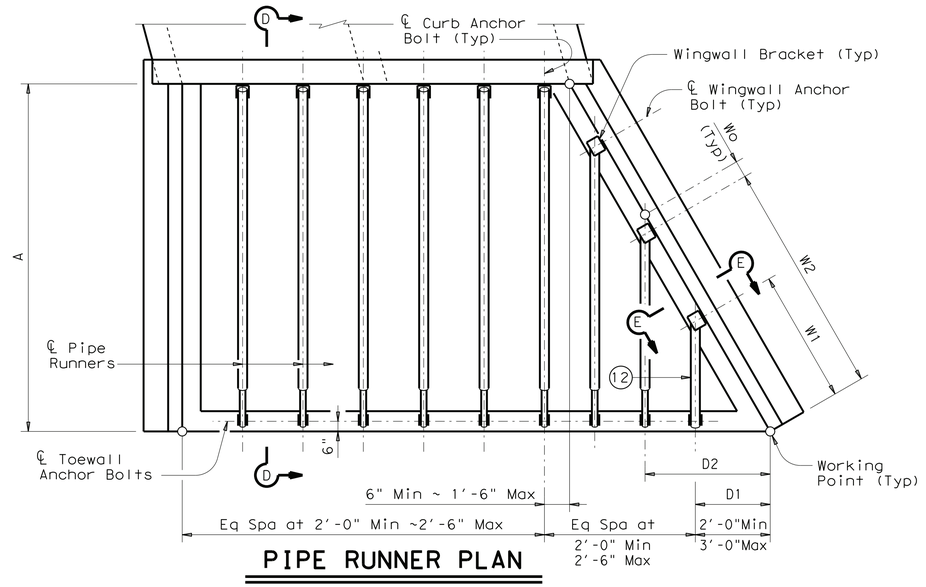

PIPE RUNNER PLAN

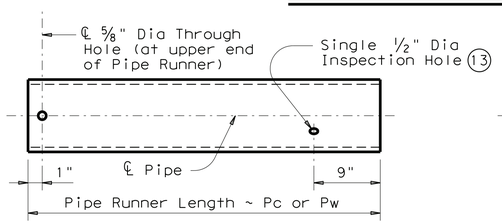

Note: Pipe diameter required for curb pipe runner shall also be used for wingwall pipe runner.

PIPE RUNNER DETAILS

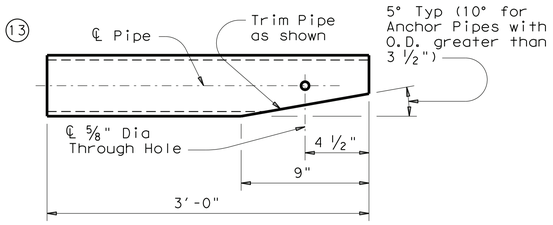

ANCHOR PIPE DETAILS

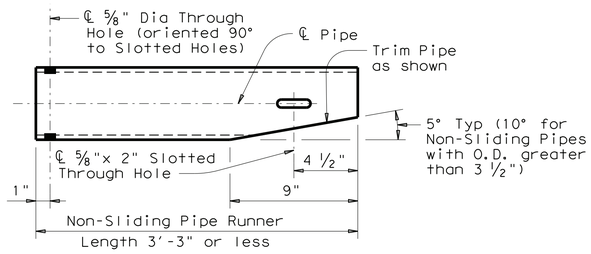

Note: Pipe size shall be same as required for curb pipe runner. Adjust the corresponding Lower Bracket accordingly.

NON-SLIDING PIPE RUNNER DETAILS

MAXIMUM PIPE RUNNER LENGTHS & REQUIRED PIPE RUNNER AND ANCHOR PIPE SIZES

Maximum Pipe Runner Length (Pc or Pw)	Required Pipe Runner Size			Required Anchor Pipe Size		
	Pipe Size	Pipe O.D.	Pipe I.D.	Pipe Size	Pipe O.D.	Pipe I.D.
9'-4"	3" STD	3.500"	3.068"	2" STD	2.375"	2.067"
19'-0"	4" STD	4.500"	4.026"	3" STD	3.500"	3.068"
33'-6"	5" STD	5.563"	5.047"	4" STD	4.500"	4.026"

(12) If Pipe Runner Length Pw is 1'-9" or less, a single Non-Sliding Pipe Runner shall replace the normal Pipe Runner and Anchor Pipe. See NON-SLIDING PIPE RUNNER DETAILS for additional information.

(13) At Contractor's option, ⅞" diameter hole may be formed or cored drilled. Percussion drilling is not permitted. Adjust placement of reinforcing steel as necessary to avoid bolt holes.

(14) After installation of Pipe Runner, the ½" inspection hole shall be utilized to ensure that the lap of the Anchor Pipe with the Pipe Runner is adequate.

(15) At Contractor's option, an epoxy anchorage system may be used. Anchorage system chosen must be able to achieve an ultimate tensile resistance of 20 kips. Anchor diameter shall be ¾". The Contractor must provide evidence to the Engineer that this can be achieved. Evidence of adequate tensile resistance can be based on the manufacturer's published values of ultimate tensile strength (anchor spacing and edge distance must be accounted for). Anchor installation, including hole size, drilling, and clean-out, must be in accordance with the manufacturer's recommendations.

PIPE RUNNER DIMENSION CALCULATIONS:

Formulas:
W"n" = (K3) (D"n") - (Wo)
Pw"n" = (D"n") (K2) - (2.063)
Pw1 Non-Sliding Pipe Runner (If required) = (D1) (K2) - (0.563)
Pc = (A) (K1) - (1.688)

W"n"= Distance from Working Point to centerline Anchor Bolt measured along bottom inside face of Wing
D"n"= Distance from Working Point to centerline Pipe Runner measured along outside face of Anchor Toewall
Pw = Wingwall Pipe Runner Length
Pc = Curb Pipe Runner Length
K = Constant Values for use in formulas

Slope SL: 1	K1	K2 ~15° Skew	K2 ~30° Skew
3:1	~ 1.054	~ 1.826	~ 1.054
4:1	~ 1.031	~ 1.785	~ 1.031
6:1	~ 1.014	~ 1.756	~ 1.014

K3 = 15° Skew ~ 2.000
30° Skew ~ 1.414
"n" = Wing Pipe Runner Number
Wo = 15° Skew ~ 5"
30° Skew ~ 2 ½"

Texas Department of Transportation — Bridge Division Standard

SAFETY END TREATMENT WITH FLARED WINGS

FOR 15° & 30° SKEW BOX CULVERTS
TYPE I ~ CROSS DRAINAGE

SETB-FW-S

FILE: setbfsse.dgn	DN: GAF	CK: CAT	DW: TxDOT	CK: GAF
©TxDOT February 2010	CONT	SECT	JOB	HIGHWAY
REVISIONS				
11-10: Add note for synthetic fibers.	DIST	COUNTY		SHEET NO.